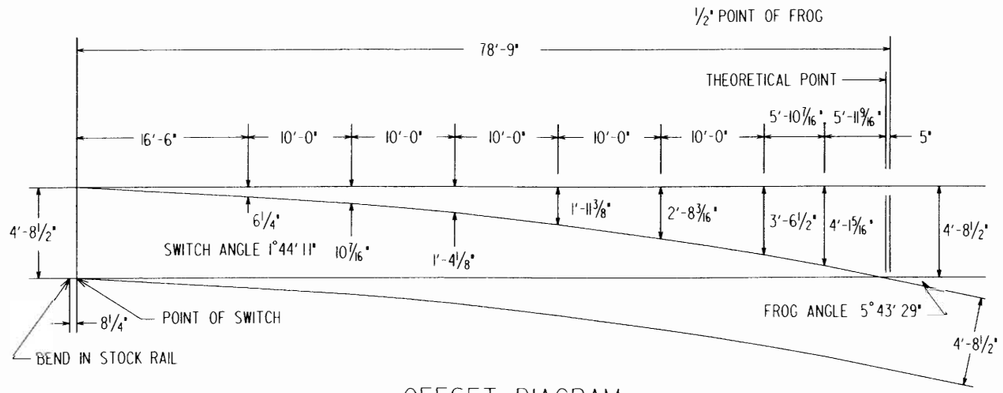

OFFSET DIAGRAM

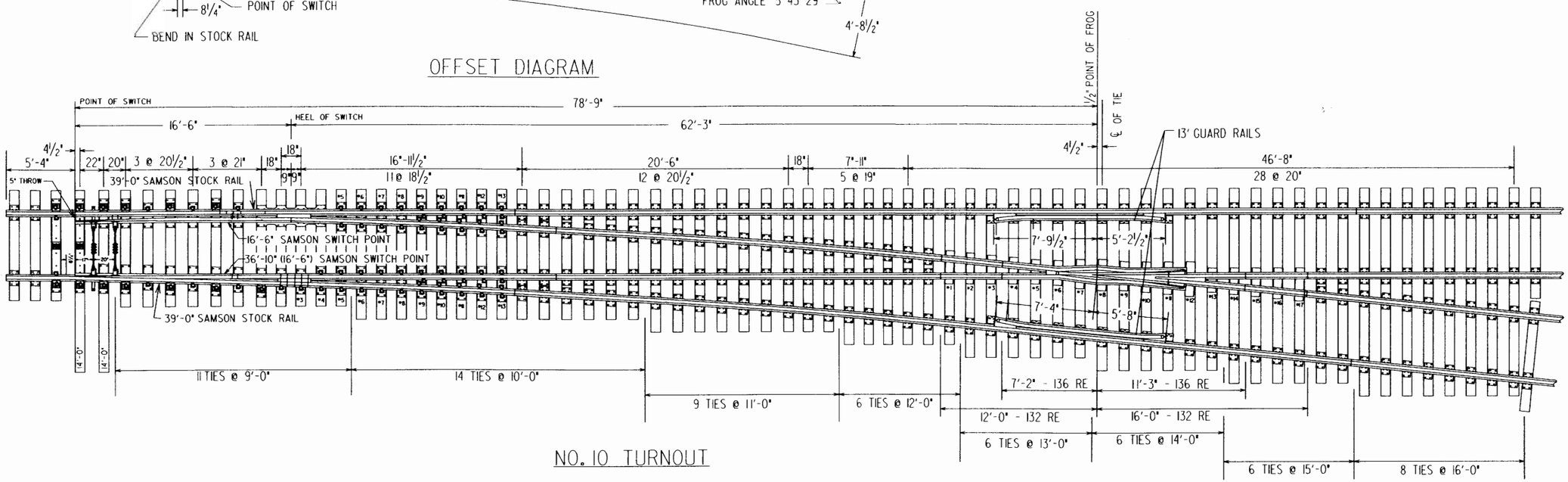

NO. 10 TURNOUT

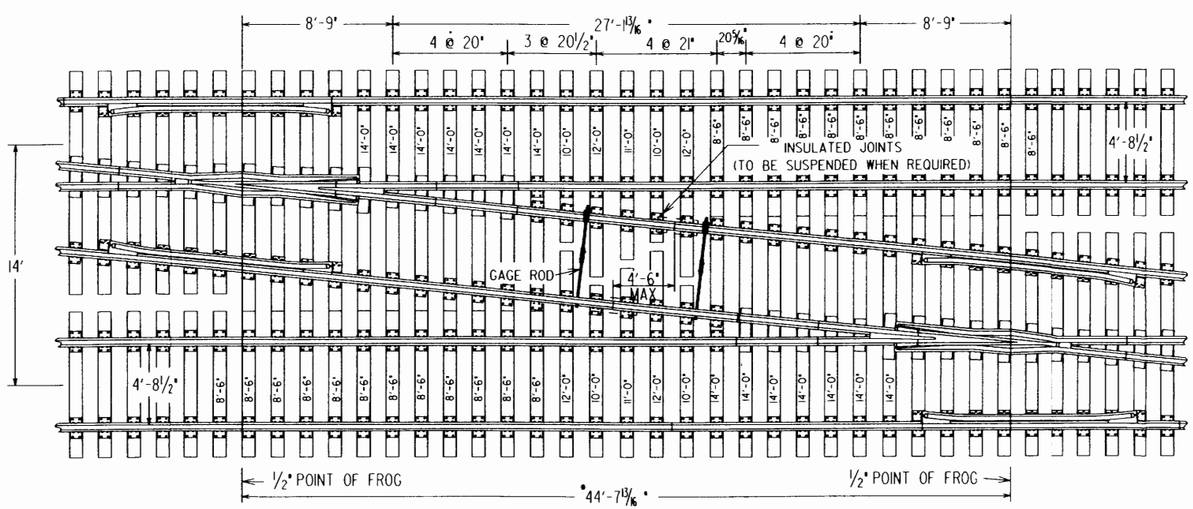

• FOR EACH 1" OVER OR UNDER 14'-0" TRACK CENTERS ADD OR SUBTRACT 9 3/32 " TO DISTANCE BETWEEN ½" POINT OF FROGS IN CROSSOVER.

CROSSOVER

BILL OF SWITCH TIES-7" X 9" TURNOUT	
NO. OF Pcs.	LENGTH
11	9'-0"
14	10'-0"
9	11'-0"
6	12'-0"
6	13'-0"
8	14'-0"
6	15'-0"
8	16'-0"
TOTAL NO. Pcs.	71
TOTAL LIN. FT.	818
TOTAL F.B.M.	4,294.5

CROSSOVER DATA	
FOR TANGENT TRACK	
TRACK CENTERS	DISTANCE BETWEEN ½" POINTS
13'-0"	34'-8⅛"
14'-0"	44'-7 15/16"
15'-0"	54'-7½"
16'-0"	64'-7 3/16"
17'-0"	74'-6⅛"
18'-0"	84'-6 9/16"
19'-0"	94'-6¼"
20'-0"	104'-5 15/16"

SEE PLAN 1-4 FOR BOLTS USED IN TRACK CONSTRUCTION
PLAN 3-19 FOR SWITCH LUGS (CLIPS)
PLAN 3-20 FOR SWITCH RODS
PLAN 3-21 FOR SWITCH PLATE DETAILS
PLAN 3-22 FOR ADJUSTABLE BRACE PLATE DETAILS
PLAN 3-32 TO 3-35 FOR SWITCH STANDS
PLAN 3-7 FOR 16'-6" WELDED SWITCH
PLAN 4-14 FOR RAIL BOUND MANGANESE FROGS
PLAN 4-19 FOR FROG PLATE DETAILS

NORFOLK SOUTHERN RAILWAY COMPANY

NO.10 132 /136 RE TURNOUT

WITH

16'-6" SWITCH AND

RAIL BOUND MANGANESE FROG

SEPTEMBER 1996

Atlanta , Georgia

DATE	REVISION