Public Projects Manual

For Projects Which May Impact Norfolk Southern Railway Company

Effective Date: August 1, 2015

NORFOLK SOUTHERN®

The following is a list of revisions to the Norfolk Southern Public Projects Manual - Effective Date: September 23, 2013. These revisions have been incorporated into the manual and are effective as of August 1, 2015.

Public Projects Manual

- **Page ii** – **Section 1.1** – Replaced *Construction Agreement* with *Project Agreement*
- **Page iii** – Replaced *Construction Agreement* with *Project Agreement* in the Table of Contents
- **Page iv** – Replaced *Section F.5 – Construction Right of Entry Agreement* with *Section F.5 Contractor Right of Entry Agreement* in the table of contents
- **Page iv** – Replaced *Section F.2 – Construction Agreement* with *Section F.2 Project Agreement* in the table of contents
- **Page iv** – Deleted Sections H.4.9 through H.4.14 from the Table of Contents
- **Page 1** – Replaced *Construction Right of Entry Agreement* with *Contractor Right of Entry Agreement*
- **Page 1** – Replaced *Construction Agreement(CA)* with *Project Agreement(PA)*
- **Page 3** – **Section 4.1.3** – Replaced *Construction Agreement* with *Project Agreement*
- **Page 3 & 4** – **Sections 4.2 & 4.3** – Replaced *CA* with *PA*
- **Page 4** – **Section 4.2.2** – Replaced *Construction Agreement* with *Project Agreement*
- **Page 5** – **Section 4.3.3** – Replaced *Construction Right of Entry Agreement* with *Contractor Right of Entry Agreement*
- **Page 9** – **Section 5.6** – Replaced *Construction Agreement* with *Project Agreement*
- **Page 10** – **Section 5.7** – Added *Please note that at no time will NS allow Banners or Signs to be attached their bridge structures.* to the end of Paragraph 1.

Appendix A

- **Page A-1 – Section 1** – Contact information has been updated to reflect the current NS Public Project Contacts.

Appendix D

- **Page D.1-2 – Section 14** – Added *Anticipated Number of Flagging Days*
- **Page D.2-2 – Section 12** – Added *Anticipated Number of Flagging Days*
- **Section D.3 –** *Added Data Sheet for at-grade crossings*

Appendix E

- **Page E-1 – Section 1** Added to last paragraph *These terms and conditions are subject to change without notice, from time to time in the sole discretion of the Railroad. Contractor must request from Railroad and follow the latest version of these provisions prior to commencing work.*

- **Page E-1 – Section 2.A.1** – Replaced *Construction* with *Contractor*
- **Page E-5 – Section 5.D.2** – Replaced *H.1.4.E* with *H.1.6.E*
- **Page E-5 – Section 5.D.7** – Added *7. The front face of shoring located to the closet NS track for all shoring set-ups located in Zone 2 as shown on NS Typical Drawing No. 4 – Shoring Requirements (Appendix I) shall remain in place and be cut off 2'-0" below the final ground elevation. The remaining shoring in Zone 2 and all shoring in Zone 1 may be removed and all voids must be backfilled with flowable fill.*
- **Page E-6 – Section 5.E.2** - Added *2. The installation methods provided are for pipes carrying storm water or open flow run-off. All other closed pipeline systems shall be installed in accordance Norfolk Southern's Pipe and Wire Program and the NSCE-8*
- **Page E-14 – Section 7.A.4 –** Added *For Projects exceeding 30 days of construction, Contractor shall provide the flagmen a small work area with a desk/counter and chair within the field/site trailer, including the use of bathroom facilities, where the flagman can check in/out with the Project, as well as to the flagman's home terminal. The work area should provide access to two (2) electrical outlets for recharging radio(s), and a laptop computer; and have the ability to print off needed documentation and orders as needed at the field/site trailer. This should aid in maximizing the flagman's time and efficiency on the Project*
- **Page E-19 – Section 14.A.2.c** – replaced (*Norfolk Southern Railway Company)* with *(As named in the Project Agreement with Project Sponsor)*
- **Page E-20 – Section 14.C –** Replaced *Department* with *Sponsor*

Appendix F

- **Page F-1 –** Replaced *F.2 Construction Agreement* with *F.2 Project Agreement*
- **Page F-1 –** Added *F.5 Contractor Right of Entry Agreement*
- **Section F.2** – Revised to reflect new Project Agreement template
- **Sections F.5** – Revised to reflect new Contractor Right of Entry Agreement template

Appendix G

- **Page G-2 & G-3 – Section 5** – Section 5 was added to define NS Real Estate Engineering Easement Plat and Legal Description Requirements.

Appendix H

- **Page H.1-4 – Section 4.A.3** – Replaced Previous Section
- **Page H.2-3 – Section 5.C.3** – Replaced *H.4.3* with *H.4.2*
- **Page H.2-3 – Section 5.C.4** – Replaced *E.4.3* with *H.4.2*
- **Page H.2-4 – Section 6.A.1.e** – Replaced *and the steel deck must be welded and not bolted to the floor beams.*
- **Page H.2-6 – Section 6.D.1** – Replaced *9'-6"* with *10'-0"*
- **Page H.2-6 – Section 6.D.2** – Replaced *9'-6"* with *10'-0"*
- **Page H.2-7 – Section 7.D.7** – Replaced *non-perforated* with *perforated*

- **Page H.2-11 – Section 13.A.1** – Deleted *be greater than*
- **Page H.2-11 – Section 13.A.2** – Revised to show *Proposed rate of change (r) of vertical curves should comply with AREMA Chapter 5, Section 3.6.*
- **Page H.2-11 – Section 13.B.1** – Added *Spirals may be required between the circular curves of a compound curve depending upon superelevation changes and/or the magnitude of the difference in degree of curvature based on design speed. See MW&S Standard Procedure #240*
- **Page H.2-11 – Section 13.B.3** – Added *Horizontal circular curves should be a minimum of 100 feet long.*
- **Page H.2-12 – Section 13.G.3 –** Added *Grading shall not occur within 9' of centerline of existing main track.*
- **Page H.3-1 – Section 1** – Replaced *part 4 and 5 apply* with *part 4 applies*
- **Page H.3-1 – Section 2** – Replaced *This Section is for under track culverts only* with *This Section is for under track culverts conveying storm water run-off only*
- **Page H.3-1 – Section 2** – Deleted *and Norfolk Southern's Special Provisions for Protection of Railway Interests*
- **Page H.4-1 –** Deleted Sections H.4.9 through H.4.14
- **Page H.4.1-2 – Section 6.B –** Added *Tension Control Bolts are not permitted*
- **Page H.4.3-3 – Section 6** – Added Section 6 for Alternate Waterproofing Membrane Application
- **Page H.4.6-1 – Section 2.A –** Replaced *part 4 and 5 apply* with *part 4 applies*
- **Page H.4.6-1 – Section 1.C –** Added *This Specification is only for culverts installed in accordance with Section H.3 of the Norfolk Southern Public Projects Manual.*
- **Page H.4.7-1 – Section 2.A –** Replaced *part 4 and 5 apply* with *part 4 applies*
- **Page H.4.7-1 – Section 1.B –** Added *This Specification is only for culverts installed in accordance with Section H.3 of the Norfolk Southern Public Projects Manual.*
- **Page H.4.8-1 – Section 2.A –** Replaced *part 4 and 5 apply* with *part 4 applies*
- **Page H.4.8-1 – Section 1.B –** Added *This Specification is only for culverts installed in accordance with Section H.3 of the Norfolk Southern Public Projects Manual.*

Appendix I

1. Introduction

NS places the highest priority on safety – for its employees and for the public. The company must also give careful consideration to anything that could adversely affect customer service, compensation for use of railroad property, and risk to railroad operation.

The Public Project Engineers are the initial contact for NS and are assigned territories by State (see Appendix A for Project Engineers and state assignments). Please contact them directly about Public Projects using the information provided. General Engineering Consultants (GEC) provide administrative and engineering services to assist NS in managing public projects.

The Norfolk Southern Railway's (NS) Public Projects team is involved in a wide variety of projects initiated by government agencies, local businesses and others. Accurate and timely communication of information between NS and these parties improves planning, relationships and successful completion of projects.

The information in this Manual is intended to improve communication and cooperation on construction and improvement projects that may involve NS. The purpose of this Manual is to inform Project Sponsors, Contractors and other Parties involved with projects being constructed over, under or adjacent to NS of Railroad policies, requirements, criteria and standards for the design and construction of those projects. Compliance with these guidelines is required to achieve uniformity in the preparation of construction documents and to expedite the review and approval by the Railroad of design and construction submittals. Examples of projects covered by this Manual include, but are not limited to the following:

A. Highway-Rail Grade Crossings: Closure, removal, installation and alterations of public highway-rail grade crossings.

A.1. Signals: Installation or alterations of highway-rail grade crossing warning and signal devices shall be coordinated with NS Communications & Signal (C&S) Department:

Administrator Highway Grade Crossings
Norfolk Southern Corporation
1200 Peachtree St. NE
Atlanta, GA 30309
Telephone: (404) 529-1234

A.2. Quiet Zones: Information for a community request to establish a new quiet zone is located at: http://www.nscorp.com/nscportal/nscorp/Community/Quiet%20Zone%20Information/

B. Bridges Over NS: Construction, reconstruction, rehabilitation, repair, removal and maintenance of bridges over the railroad by outside parties.

C. Bridges Carrying NS: Construction, reconstruction, rehabilitation, repair, removal, and maintenance of bridges carrying NS over highways and other public properties initiated by outside parties.

D. Parallel Roads/Facilities: Construction, reconstruction, modification, removal, and maintenance of parallel roads or other public facilities affecting NS property or operations.

E. Beautification: Modification of structures over or adjacent to the railroad involving aesthetic work only.

F. Bridge Painting: Painting of structures over or adjacent to NS property.

G. Landscaping: Non-structural modifications to land on, adjacent to, or impacting NS right-of-way (ROW).

H. Other Projects Involving NS Rail Corridors: Publicly sponsored projects involving or altering NS facilities or its property, including highway construction, drainage improvements or other activities that require access to NS ROW or property.

H.1 Pipe And Wire : Installation, relocation, or modification of utilities above or below Norfolk Southern's right of way shall be coordinated with Norfolk Southern's Pipe and Wire Program. Information can be found at: http://www.nspipeandwire.com/

The purpose of review by the Railroad is solely to ensure compliance with the minimum standards of NS, dealing with particular areas of concern to rail transportation, and not to warrant the general safety and longevity of any structure. The information in this document is a tool only and all statements are intended to be for broad use. Specific projects will be subject to analysis of all factors and formal agreements between parties. Safety is always the highest priority.

1.1 Guidelines and References

These Guidelines are provided for reference only and are subject to revision without notice. These Guidelines cannot be taken as authority to construct. Execution of a preliminary engineering agreement, Railroad approval of construction documents, execution of a project agreement, railroad approval of insurance, and railroad Right-of-Entry Agreement (if applicable) are required prior to beginning construction. These Guidelines should be considered in addition to the current AREMA Manual for Railway Engineering, AASHTO, MUTCD, and State Railroad Regulatory Body requirements. Where these Guidelines and the documents referenced in the preceding sentence differ, these Guidelines will govern.

The AREMA Manual is available from:

American Railway Engineering and Maintenance-of-Way Association
4501 Forbes Boulevard, Suite 130
Lanham, MD 20706–4326
Phone: (301)459-3200; Fax: (301) 459-8077
http://www.arema.org/

The AASHTO Manual is available from:

American Association of State Highway and Transportation Officials.
444 N Capitol St. NW - Suite 249
Washington, DC 20001
https://bookstore.transportation.org/

The MUTCD is available from:

U.S. Department of Transportation – Federal Highway Administration
http://mutcd.fhwa.dot.gov/

The specific railroad requirements for projects, as addressed in this document, shall be followed at all locations where the Railroad operates, regardless of track ownership or track status, either active or out of service.

Any items affecting Railroad property not covered in these Guidelines shall be subject to the Railroad's prior review and approval.

All new or modified overhead structures or underpass structures shall be designed in accordance with the most current policies, requirements and standards of NS.

2. Table of Contents

1. Introduction i

1.1 Guidelines and References ii

2. Table of Contents iii

Appendices iv

Appendices - Continued v

3. Summary of Definitions in the Manual 1

4. Summary Steps of a Project Initiated by an Outside Party 3

4.1 Preliminary Engineering 3
4.1.1 Overview 3
4.1.2 Purpose of Preliminary Engineering 3
4.1.3 Process Steps To Be Taken 3
4.1.4 Submittal Requirements 3
4.1.5 Right of Entry – Access to NS Property 4
4.1.6 Costs and Expenses 4
4.1.7 Timing 4
4.1.8 Standard Documents 4

4.2 Agreements 4
4.2.1 Preliminary Engineering Agreement 4
4.2.2 Project Agreement 4

4.3 Construction 5
4.3.1 Overview 5
4.3.2 Purpose of Construction Engineering 5
4.3.3 Process Steps To Be Taken 5
4.3.4 Insurance 5
4.3.5 Preconstruction Meeting 6
4.3.6 Flagging 6
4.3.7 Construction Submittal Requirements 6
4.3.8 Authorization Letter/Email 6
4.3.9 Construction Monitoring 7
4.3.10 Costs and Expenses 7
4.3.11 Timing 7

5. Project Types 8

5.1 Highway-Rail Grade Crossings 8
5.2 Bridges over NS 8
5.3 Bridges Carrying NS 8
5.4 Parallel Roads/Facilities 9
5.5 Bicycle/Pedestrian Trails and Crossings 9
5.6 Painting Overhead Bridges 9
5.7 Bridge Beautification and Landscaping 10

Appendices

A. Norfolk Southern Public Projects Contacts

B. Norfolk Southern System Maps

C. Norfolk Southern Schedule for Review of Public Projects

D. Norfolk Southern Project Data Sheets
- D.1. Overhead Grade Separation Data Sheet
- D.2. Underpass Grade Separation Data Sheet

E. Norfolk Southern Special Provisions for Protection of Railway Interests

F. Typical Agreements
- F.1. Preliminary Engineering Agreement
- F.2. Project Agreement
- F.3. Beautification Agreement
- F.4. Right of Entry Agreement
- F.5. Contractor Right of Entry Agreement

G. Norfolk Southern Requirements for Easements and Right of Way

H. Norfolk Southern Guidelines for Design of Grade Separation Structures
- H.1. Overhead Grade Separation Design Criteria
- H.2. Underpass Grade Separation Design Criteria
- H.3. Guidelines for Under Track Culverts
- H.4. Norfolk Southern Design Specifications
  - H.4.1. Specifications for Steel
  - H.4.2. Specifications for Cast-in-Place Concrete
  - H.4.3. Specifications for Membrane Waterproofing
  - H.4.4. Specifications for Painting Shop Fabricated Bridge Steel
  - H.4.5. Specifications for Field Painting of Bridges
  - H.4.6. Specifications for Installation of Under Track Culverts by Open Cut Method
  - H.4.7. Specifications for Installation of Under Track Culverts by the Jack and Bore Method
  - H.4.8. Specifications for Installation of Under Track Culverts by the Tunneling Method

Appendices - Continued

I. Norfolk Southern Typical Drawings & Details

1. Overhead Bridge Details - Permanent Clearances
2. Overhead Bridge Details - Ditch and Drainage
3. Overhead Bridge Details - Bridge Fencing
4. Shoring Design Guide - Shoring Requirements
5. Shoring Design Guide - Lateral Pressures from Train Loads
6. Track Design Guide - Reverse Curve Diagram
7. Track Design Guide - Curve Superelevation
8. Track Design Guide - Roadbed Section Double Main
9. Track Design Guide - Roadbed Section Single Main
10. Track Design Guide - Roadbed Section Heavy Tonnage
11. Underpass Bridge Details - Typical Cross Section Single Track
12. Underpass Bridge Details - Typical Cross Section Double Track
13. Underpass Bridge Details - Handrail
14. Underpass Bridge Details - Vandal Fencing with Handrail I
15. Underpass Bridge Details - Vandal Fencing with Handrail II
16. Underpass Bridge Details - Deck Drain I
17. Underpass Bridge Details - Deck Drain II
18. Underpass Bridge Details - Waterproofing
19. At-grade Crossing Details - Asphalt Paving with Rubber Flange Way
20. Overhead Protection for Trails Under Norfolk Southern
21. Right-of-Way Fencing Details
22. Security Fencing Details
23. Geotextile Ballast Protection Details

J. List of Norfolk Southern Reference Documents

3. Summary of Definitions in the Manual

NS has assembled all written requirements or criteria readily available within the railroad or use in this Manual. The following is a listing of definitions to help in the understanding of the manual.

Access Road: A road used and controlled by NS for maintenance, inspection and repair.

AREMA: The current edition of the American Railway Engineering and Maintenance-of-Way Association Manual for Railway Engineering.

AASHTO: The current edition of the American Association of State Highway and Transportation Officials Standard Specifications for Highway Bridges.

Project Agreement (PA): An agreement that has been negotiated between NS and the Sponsor that addresses all the duties and responsibilities of each party regarding the construction of the proposed project, including the force account estimate and the maintenance requirements after construction of the said project.

Construction Documents: Refers to design plans and calculations, project and/or standard specifications, geotechnical report and drainage report used to construct a project.

Contractor Right of Entry Agreement: An agreement between the Railroad and the Contractor allowing access to Railroad property to perform construction activities. All Contractors will be required to execute this agreement prior to starting any work on the Railroad property.

Contractor: The individual, partnership, corporation or joint venture and all principals and representatives (including Sponsor's subcontractors) with whom the contract is made by the Sponsor for the construction of the project.

Crossover: A track connection between two adjacent tracks.

Construction Window: A timeframe in which construction or maintenance can be performed by the Contractor with the required presence of a Flagman.

Engineer-of-Record: The Professional Engineer that develops the criteria and concept for the project and is responsible for the preparation of the Plans and Specifications. The Engineer-of-Record must be registered in the state of the project location. The Engineer-of-Record may be the Sponsor's in-house staff or a consultant retained by the Sponsor. The Contractor shall not employ the Engineer-of-Record as the Contractor's Engineer-of-Record or as a Specialty Engineer, with the exception of design build projects.

Flagman: A qualified employee of NS providing watchman protection from NS operations per railroad instructions and requirements.

Force Account Estimate: A time and materials estimate prepared by the railroad that reflects the anticipated costs to be incurred by the railroad. There is no cost allocation included for profit.

GEC: General Engineering Consultants (GECs) provide engineering services to support and represent NS's interest in public projects. GECs perform preliminary engineering, construction inspection, and monitoring under the direction of the NS Engineering personnel. GEC personnel may also perform project administration of projects.

Guidelines: Refers to the information contained in this document or referenced in AREMA or AASHTO.

Grade Separation Project: A project that includes an Overhead or Underpass Structure that crosses the NS right-of-way or other railroad operating location regardless of track status being active or out of service.

Industrial Track: A track connected to the main track or siding which is generally owned by a customer of NS.

Main Track: A track extending through yards and between stations that must not be occupied without proper authority.

Multiple Main Tracks: Two or more parallel or adjacent main tracks.

Overhead Structure: A roadway, trail or pedestrian structure over the NS right-of-way.

Preliminary Engineering: The Preliminary Engineering for a project is referred to as the "PE."

Preliminary Engineering Agreement: An agreement that has been negotiated between NS and the Sponsor that addresses all the duties and responsibilities of each party regarding the engineering review of the proposed project, including the force account estimate of the said project.

Private Crossing Agreement: An agreement that has been negotiated between NS and the Sponsor and/or a contractor for the construction of a new or the use of an existing at-grade crossing.

Public Project Engineer: The individual designated by the NS as the primary point of contact for the project.

Railroad: Refers to Norfolk Southern Railway Company or its subsidiaries.

Railroad Right-of-Entry Agreement: An agreement between the Railroad and a Sponsor or a Contractor allowing access to Railroad property. This agreement cannot be used for construction.

Siding: A track connected to the main track and used for meeting, storing or passing trains.

Sponsor: Any entity proposing a project on, over or adjacent to the NS right-of-way or other NS operating location, regardless of track being active or out of service.

Temporary Construction Crossing/Access: A temporary at-grade crossing for the exclusive use of the contractor working on the project. Temporary construction crossings are evaluated on a per project basis and if approved, require separate approvals, agreements, and fees with NS' Real Estate Group.

Timetable: A railroad publication with instructions on train, engine or equipment movement. It also contains other essential Railroad information.

Trail: A pathway impacting NS right-of-way or other NS operating locations regardless of track status being active or out of service. This includes pedestrian, bicycle, approved motorized recreational equipment and equestrian uses.

Underpass Structure: A railroad structure over a roadway and/or trail.

Yard: A system of tracks, other than main tracks and sidings, used for making up trains, storing cars and other purposes.

Yard Limits: A portion of main track designated by "yard limit" signs and included in the timetable special instructions or a track bulletin.

4. Summary Steps of a Project Initiated by an Outside Party

4.1 Preliminary Engineering

4.1.1 Overview

Any proposals that Project Sponsors and others outside NS make that may affect or be near the NS right-of-way must be evaluated in advance by NS to ensure the safety of the public and NS employees, maintain timely rail service to NS customers, and protect NS property and operations.

4.1.2 Purpose of Preliminary Engineering

The purpose of the Preliminary Engineering is to identify issues related to safety, engineering, customer service, operations, legal and regulatory matters, expense, risk, future needs and other considerations specific to any proposed project. The NS review of plans is only to determine that the plans, and improvements constructed in accordance with the plans, satisfy NS's requirements.

4.1.3 Process Steps To Be Taken

- Contact the NS Public Project Engineer of the project location and provide initial project information. (See Appendix A)
- Review and complete a standard PE agreement (See Section 4.2).
- Provide project information; attend meetings (as needed), review site with NS or GEC personnel.
- Submit initial plans to NS, or designated GEC, for review.
- Respond to NS (and/or designated GEC) concerns and adjust design, if necessary.
- Submit final design to NS (and/or designated GEC) for review comments and/or approval.
- NS will complete final review to ensure compliance with railroad requirements.
- NS will estimate the cost of the Force Account work to be done by NS during construction.
- When the Project Sponsor and NS approve the project for construction, a standard project agreement will be prepared for execution. (See Section 4.2.2)

4.1.4 Submittal Requirements

As a project evolves through preliminary engineering, the Sponsor or their designated representative shall submit all applicable design and reference documents to NS for review and approval. Project Sponsors shall reference the NS Special Provisions and applicable Design Criteria provided in Appendices E, H, & I to ensure compliance in all aspects of the design. NS requires that the following submittal packages be provided in **electronic format (.pdf).**

- Concept Package – Includes plans, scope, location map, and aerial photos.
  - General Plan, Elevation, and Typical Sections
  - Descriptive scope of work detailing the anticipated construction effort and specifically highlighting the potential impacts to NS
  - A completed Norfolk Southern Project Data Sheet (See Appendix D for data sheets)
- 30% Package – Applicant Response to Conceptual Plan Comments, Design Plans, Project Specifications, Applicable Design Reports
  - Sponsor generated 'Response to Comments' and revised plans incorporating modifications to the Concept plans
  - Revised General Plan, Elevation, and Typical Sections – Include utilities identified within the project site. General Notes Sheet indicating structure design criteria, project design and construction specifications, and anticipated constructed methodology.
  - Applicable Design Reports
  - Construction Staging Documents (if required)
- 60 % Package – Applicant Response to 30% Package, Final Design Plans, Project Specifications, Project Special Provisions, Applicable Design Reports, and Property Deeds, Easement, and ROW Plans. Refer to Appendix G for Norfolk Southern Requirements for easements and ROW plans.
- 100% Package – Applicant Response to 60% Package, Final Design Plans, Project Specifications, Project Special Provisions, Applicable Design Reports
  - Sponsor generated 'Response to Comments' and revised plans incorporating modifications to the 60% Plans.
  - Revised General Plan, Elevation and Typical Section as well as any additional details required to clearly depict the construction impacting NS. General Notes Sheet indicating the final structure design criteria, project design and construction specifications, and anticipated construction methodology.
  - Final Project Specifications and Special Provisions detailing the construction requirements for all work impacting NS. This

package should include the NS Special Provisions.

- Applicable Design Reports (as revised or developed following the 60% submission)
- Final Construction Staging Documents (as required)
- All Plans shall be signed and sealed by a Professional Engineer licensed in the state of the project.

4.1.5 Right of Entry – Access to NS Property

Throughout Preliminary Engineering, many public projects located over, under or adjacent to NS will require outside parties to enter the NS right of way for investigative activities – including but not limited to surveying and environmental or geotechnical sampling. All parties requiring access to the NS right of way for these efforts must complete a 'Right of Entry' application and submit a detailed scope of work and reference plans/exhibits clearly conveying the limits occupied or disturbed by the investigative activities. In addition, said companies must satisfy all NS Insurance requirements before entry to the right of way will be permitted. To expedite the review process, all documents shall be submitted to the appropriate NS Division office for further processing. Refer to Appendix F for a blank application and additional instructions.

4.1.6 Costs and Expenses

NS requires payment for its costs and expenses for reviewing and handling the PE. In addition, all expenses of the party seeking the review will be borne by that party, including expenses for NS employees or GEC personnel attending meetings, reviewing plans, preparing correspondence, travel expenses and other activities to support the review of the project.

Fair compensation for the use of NS's company's resources is necessary and reasonable. Moreover, the types of projects being addressed in this manual usually do not directly benefit NS's core business of providing transportation service vital to its customers. As a result, NS seeks payment for its costs and expenses incurred in connection with project review or construction.

4.1.7 Timing

It is in the interest of all parties to complete the PE review before commitments are made or construction steps begin. NS will work to be responsive, with timing depending upon the complexity of the project. NS, and its GEC, will work with the project sponsor to schedule PE and construction to meet project schedule objectives whenever possible, considering available resources. (For review schedule see Appendix C)

4.1.8 Standard Documents

NS utilizes standard documents for the review of all projects.

- Design Guidelines (Appendix H)
- Typical Plans & Details (Appendix I)
- Special Provisions for Work on NS Right of Way (Appendix E)

4.2 Agreements

NS executes many agreements each year for preliminary engineering and construction of projects. Standard agreements can be executed by NS without additional law department review. Non standard agreements or terms will require additional law department review. There are variations in standard documents used with some states and agencies. Sample Typical NS agreements are available in the Appendix F.

4.2.1 Preliminary Engineering Agreement

To initiate a construction or improvement project, a Preliminary Engineering (PE) agreement is required to identify the Sponsor, the project, define the tasks to be accomplished and specify the payment schedule.
As part of the PE agreement, NS will provide the sponsor with a Force Account Estimate (FAE) detailing the anticipated costs to be incurred in PE. Once the PE agreement is executed, NS will only bill the Sponsor for actual expenses incurred. In the event that NS anticipates it may incur reimbursable expenses in excess of the original FAE amounts, NS will provide the Project Sponsor with a revised FAE for approval.

NS will not initiate any PE work without either a fully executed PE agreement or written authorization to incur costs from the Project Sponsor. An example PE agreement can be found in Appendix F.1

4.2.2 Project Agreement

When a project is approved, NS will work with the project sponsor to complete a project reimbursement agreement (PA). A PA is required to:

- Identify parties, the project location, and the project description.
- Define the tasks to be performed by each party during construction

- Define any future ownership or maintenance requirements
- Define all payments and contributions from the involved parties.
- Define the Sponsor's/contractor's insurance requirements.

This document is also required for access onto NS's property during the construction phase. No physical work or entry onto NS's property will be allowed without a fully executed PA.

NS will provide the Sponsor with a Force Account Estimate (FAE) detailing the anticipated costs to be incurred during construction. Once the PA is executed, NS will only bill the sponsor for actual expenses incurred. In the event that NS anticipates it may incur reimbursable expenses in excess of the original FAE amounts, NS will provide the project sponsor with a revised FAE for approval.

An example PA can be found in Appendix F.2.

4.3 Construction

4.3.1 Overview

Once a project has been approved and the PA has been fully executed, NS will initiate the work outlined in the FAE for construction. Force Account Work for construction typically includes but is not limited to:

A. Construction Engineering
- Attendance at project meetings, including project preconstruction meeting.
- Contractor submittal reviews for work impacting NS operations.
- Onsite construction monitoring.

B. Accounting

C. Flagging Services
- Onsite protective flagging provided by NS.

D. Communications Changes
- Relocations or modifications to NS Communications facilities to accommodate the construction project.

E. Signal and Electrical Changes
- Relocations or modifications to NS Signal or Electrical facilities to accommodate the construction project.

F. Track Work
- NS track relocations or modifications to accommodate the construction project, including temporary construction crossings.

G. T-cubed
- Relocations or modifications to NS Fiber Optic Communications facilities to accommodate the construction project.

4.3.2 Purpose of Construction Engineering

The purpose of Construction Engineering is to ensure that all construction work, relative to NS, is performed in accordance with the approved plans, specifications, special provisions and the PA. In addition to the project documents, all construction work performed on, under, over, or adjacent to NS must be performed in accordance with NS's "Special Provisions for Protection of Railway Interests". (Appendix E)

4.3.3 Process Steps To Be Taken

- Sign and receive a copy of the fully executed Contractor Right of Entry Agreement. (refer to Appendix F.5)
- Submit contractor's insurances for review and approval by NS. (4.3.4)
- Conduct a project preconstruction meeting with the Project Sponsor, the Contractor, NS and their GEC. (4.3.5)
- Submit a project schedule and schedule railroad protective flagging. (4.3.6)Provide Written Notice to NS of the project 10 days prior to the start of work on NS property.
- Submit contractor's submittals to NS for review by NS and their GEC. (4.3.7)
- Before any construction work may begin, the contractor must receive a written authorization letter authorizing the contractor to proceed. (4.3.8)
- GEC will perform ongoing construction monitoring for compliance with approved submittals. (4.3.9)
- During construction coordinate with NS flagman and GEC regarding any project changes to schedule or approved submissions.
- At completion of construction work conduct a project final walkthrough with the Project Sponsor, the contractor, NS and their GEC.

Please note that no work may be performed on, under, over, or adjacent to NS property until NS insurance is approved.

4.3.4 Insurance

Please refer to Section 14 and Section 2.A.2 of "NS Special Provisions for Protection of Railway Interests" located in Appendix E for all insurance requirements. Please note that originals of the full insurances policies outlined in the

NS Special Provisions must be submitted in original to NS Risk Management Department at:

NS Risk Management
Norfolk Southern Railway Company
Three Commercial Place
Norfolk, Virginia 23510-2191

Due to the number of projects system wide the contractor should anticipate a minimum of 30 days for NS Risk Management to review the insurance submittal.

4.3.5 Preconstruction Meeting

The Project Sponsor shall provide written notification in electronic format to the NS Public Projects Engineer a minimum of 2 weeks in advance of the project preconstruction meeting. NS shall be given time at the preconstruction meeting to identify their key personnel and contact information, identify the required submittals, and review the "NS Special Provisions for the Protection of Railway Interests."

4.3.6 Flagging

Please refer to "NS Special Provisions for the Protection of Railway Interests" located in Appendix E for all flagging requirements. The point of contact for flagging should be provided in the contract documents during the PE phase. NS will provide any changes or updates to the flagging point of contact at the preconstruction meeting and in the NS Authorization letter to the contractor. In accordance with NS Special Provisions, 10 days notice is required to scheduled flagging; however it may take up to 30 days to obtain flagging initially for NS. No flagging will be provided until the contractor's insurance has been approved by NS.

4.3.7 Construction Submittal Requirements

The contractor shall submit all construction related correspondence and submittals electronically to the NS Public Project Engineer and the designated GEC for review and approval. Construction submissions are required for any activities that have the potential to foul NS track, impact NS operations, or disturb NS property. All submittals will be reviewed with respect to the impacts to NS operations and overall project safety. All submittals must be prepared, signed and sealed by a registered engineer licensed in the state of the project work.

For all construction projects, submittals for review and approval should include, but are not limited to those listed below, when applicable:

- General Project Means and Methods/Construction Phasing
- Construction Excavation & Shoring
- Falsework
- Debris Shielding or Containment
- Demolition Plan
- Erection Plan
- Erosion Control
- Blasting
- Roadbed Protection
- Emergency Action Plan

For Undergrade Bridges (Bridges carrying the Railroad) the following submittals in addition to those listed above should be provided for review and approval:

- Shop Drawings
- Bearing Shop Drawings and Material Certifications
- Concrete Mix Design
- Structural Steel, Rebar, and/or Strand Certifications
- 28 day Cylinder Test for Concrete Strength
- Waterproofing Material Certification
- Test Reports for Fracture Critical Members
- Foundation Construction Reports (including all pile driving records)

Please refer to Section 5 of "NS Special Provisions for the Protection of Railway Interests" located in Appendix E and the NS Guidelines for Design of Grade Separation Structures in Appendix H for specific submittal requirements. The contractor should anticipate 30 days for NS and their GEC to complete the review of all construction submittals. Work for that specific submittal may not start until written approval in electronic format is provided by NS or their GEC.

4.3.8 Authorization Letter/Email

The Contractor shall not commence any work on, over, under, or adjacent to NS rights-of-way until he has received written authorization to proceed from the NS Public Projects Engineer. This authorization will be provided once the following has been satisfied:

- A Project Preconstruction meeting has occurred between all parties.
- Written Notice of the project from the Contractor has been provided to NS.
- NS Protective Flagging Services have been scheduled.
- Written approval from NS regarding insurance requirement has been provided.

- A schedule for all work within NS right-of-way has been furnished.

4.3.9 Construction Monitoring

To ensure the safety of the public and NS employees, maintain quality rail service to NS customers and to protect NS assets, construction monitoring of all construction work on, over, under, adjacent to, or that may in any manner affect NS will be conducted by NS or its GEC personnel.

Monitoring includes intermittent visits to the site or full time on-site monitoring during construction activities that could be hazardous to the public or NS employees and/or could impact NS operations. Construction Monitoring will also be performed to ensure that all work is being performed in accordance with approved submittals and NS Special Provisions.

Safety of the Project Sponsor or property, the Contractors, and their employees is the responsibility of the Project Sponsor and their contractor. NS and its GEC, as part of its construction monitoring, will review the work site for activities that could interfere with safe operation of the railroad. NS and its GEC are not responsible for monitoring the general work activities under the direction of the Project Sponsor for compliance with safety regulations. Any observed unsafe acts or conditions will be reported immediately to the Project Sponsor and Contractor representatives.

4.3.10 Costs and Expenses

All costs and expenses anticipated in construction will be detailed by NS in a Force Account Estimate (FAE) and provided to the Sponsor for review during the PE review phase. The approved FAE will be incorporated in the Project's Construction Reimbursement Agreement. (See Section F.2). All work anticipated by NS during the CE phase will be performed at the Project Sponsor's expense. NS will only bill the sponsor for actual expenses incurred. In the event that NS anticipates it may incur reimbursable expenses in excess of the original Construction FAE amounts, NS will provide the project sponsor with a revised FAE for approval.

4.3.11 Timing

Time frames for reviews can vary significantly depending on the complexity of the project and the quality of submittals. The review times indicated throughout this section are intended to be a guide only and will vary depending on the project. NS will work to be responsive, with timing depending upon the complexity of the project. NS, and its GEC, will work with the project sponsor to meet project schedule objectives whenever possible, considering available resources.

5. Project Types

5.1 Highway-Rail Grade Crossings

Norfolk Southern's Public Projects Group will process all roadway projects involving at-grade crossings. NS is committed to the safety of the traveling public and the NS employees who operate NS equipment at public crossings. Therefore, all efforts will be taken to close at-grade crossings where applicable while recognizing the needs of the communities through which NS operates.

At-grade crossing projects include crossing removal, consolidation, modification, rehabilitation, resurfacing/paving, maintenance and the installation/modification of warning devices. All crossings are identified by a unique US DOT Inventory Number. This number should be used to identify all at-grade crossing locations (See Appendix J for a sample inventory sign)

The NS Signal Department handles the maintenance and installation/modification of warning devices, and will provide engineering, design, and cost estimates for the warning devices at the expense of the requesting project sponsor or highway agency as part of the Preliminary Engineering for a project.

- At the PE level, submission of the 30%, 60%, ROW, and 100% plan packages should be provided to NS for review and approval.
- For new construction, consideration should be given to selection of an appropriate grade separation structure in lieu of a proposed at-grade crossing.
- For rehabilitation or roadway widening projects, consideration should be given to closure of the existing at-grade crossing and construction of an appropriate grade separation structure.
- NS and state and federal agencies recognize the safety concerns associated with at grade crossings and frequently work together with local municipalities to create solutions that enable the closure of highway-rail grade crossings.
- This work should be coordinated with NS Administrator of Highway Grade Crossings.

5.2 Bridges over NS

Projects involving bridges over NS (referred to as Overhead Bridges) include both rehabilitations of existing structures, complete bridge replacements and new structures. Refer to Appendix H.1. Overhead Grade Separation Design Criteria of this Manual for the pertinent criteria to be observed during the design process of an overhead bridge. Compliance with this design guideline will be reviewed at the preliminary engineering stage and must be adhered to except when waived by NS in writing on a project specific basis.

- At the PE level, submission of the Concept, 30%, 60%, ROW, and 100% plan packages should be provided to NS for review and approval.
- Proposed Structures over NS shall satisfy the requirements set forth in the Special Provisions and Overhead Bridge(OHB) Design Criteria. This includes horizontal and vertical clearances, protective fence requirements, drainage requirements, etc.
- Sponsor developed plans shall consider the constructability of the proposed OHB. This includes site access, crane and equipment requirements, girder splice locations, support tower requirements, overhead and undergrade utilities, as well as type of NS facility, number of tracks, future tracks, access roads, maintenance roads, and number of daily train movements.

5.3 Bridges Carrying NS

Projects involving NS bridges over a roadway or trail (referred to as Undergrade Bridges) include both rehabilitations of existing structures, complete bridge replacements, and new railroad structures. Refer to Appendix H.2. Under Grade Separation Design Criteria of this Manual for the pertinent criteria to be used for the design of an overhead bridge. Compliance with this design guideline will be reviewed at the preliminary engineering stage and must be adhered to except when waived by NS in writing on a project specific basis.

- At the PE level, submission of the Concept, 30%, 60%, ROW, and 100% plan packages should be provided to NS for review and approval. All structure calculations shall be submitted for concurrence with the design documents.
- Proposed Structures carrying NS shall satisfy the requirements set forth in the Special Provisions, NS Design Criteria, Material Specifications, and applicable sections of AREMA.
- Structure design documents shall include all appropriate construction phasing.
- Coordination with NS regarding continued train operations throughout construction shall be completed throughout the design phase. NS limitations on track outages shall be clearly indicated on the contract plans and in the special provisions.

5.4 Parallel Roads/Facilities

In situations where a roadway, retaining wall, or highway facility are being modified or constructed adjacent to Norfolk Southern Railroad, the Sponsor shall engage NS to ensure the project will not adversely impact the railroad. The design of highways, highway intersection, and crossings are the responsibility of the Sponsor. Where possible, parallel public roads should be located off NS property. Parallel roads involving a crossing, either existing or proposed, shall be aligned to allow sufficient distance for the largest permitted vehicle utilizing the road to safely stop between the parallel road and the railroad control signs, markings or warning devices.

Roadway runoff drainage adjacent to railroad property must be designed to drain away from the railroad and prevent standing water and potential erosion. Access for NS equipment to the railroad right-of-way, structures, and track shall not be restricted or prevented. In addition to NS guidelines, Federal and State design manuals, the Manual of Uniform Traffic Control Devices (MUTCD) and the American Railway Engineering and Maintenance of Way Association manuals (AREMA) provide design information to be considered by the highway agency responsible for the project design. The appendix to this document lists additional information on the MUTCD and AREMA manuals.

- At the PE level, submission of the 30%, 60%, ROW, and 100% plan packages should be provided to NS for review and approval.
- Care shall be made to locate all parallel public roads/facilities off the NS property where possible.
- Drainage for both the public road and NS shall be considered. Adverse impacts to the NS property resulting from insufficient drainage devices and E&S controls will not be permitted.
- Access to the NS right of way for its employees and agents shall not be restricted by the proposed facilities.

5.5 Bicycle/Pedestrian Trails and Crossings

NS policy does not allow pathways that would permit pedestrian, bicycle, and other recreational traffic to move parallel to trains on NS right-of-way or to cross at grade.

NS recognizes that communities often wish to establish recreational paths in areas adjacent to active railroads. These paths are of great value to local communities, and while NS will cooperate in the establishment of these paths, it is critical to recognize that important requirements must be met and safety precautions taken to protect the public and NS employees.

In rare circumstances where a path and NS rail lines parallel each other, safety measures such as signage and fencing will be required. Installation and future maintenance costs of these signs are the responsibility of the trail sponsor or agency and are essential to the safety of those using the railroad and the path.

At-grade trail crossings will not be allowed by NS, but trails can be allowed under or over the tracks provided appropriate safety measures are provided and that the project follows the previously described preliminary engineering review and construction monitoring processes. When a pathway occurs at an established highway-rail at-grade crossing, it will be considered provided it is within the highway easement across NS right-of-way and appropriately signed and protected. The cost of signs, crossings and warning systems will be paid by the project sponsor or agency.

- At the PE level, submission of the Concept, 30%, 60%, ROW, and 100% plan packages should be provided to NS for review and approval.
- Proposed Structures over NS shall satisfy the requirements set forth in the Special Provisions and Overhead Bridge (OHB) Design Criteria. This includes horizontal and vertical clearances, protective fence requirements, drainage requirements, etc.
- Sponsor developed plans shall consider the constructability of the proposed OHB. This includes site access, crane and equipment requirements, girder splice locations, support tower requirements, overhead and undergrade utilities, as well as type of NS facility, number of tracks, and number of daily train movements.
- Parallel bicycle and pedestrian trails shall be located off the NS property.
- Protective fence and appropriate signage may be required at the discretion of NS. Fencing may need to provided on structure and/or adjacent to the trail or path.

5.6 Painting Overhead Bridges

Cleaning and painting bridges over NS right-of-way requires an agreement with NS to ensure no impact will be incurred by the railroad and that all applicable safety regulations are followed. A Preliminary Engineering agreement may be required to cover NS's review of the project and to prepare a cost estimate and project

agreement for flagging and field monitoring as applicable. Flagging is typically required to protect railroad operations and ensure the safety of the public, NS employees and the contractor responsible for the work.

- At the PE level, submission of the 30%, 60 %, ROW and 100% plan packages should be provided to NS for review and approval.
- Projects limited to the painting of existing structures over NS shall satisfy the requirements set forth in the Special Provisions and Overhead Bridge (OHB) Design Criteria. This includes consideration of temporary horizontal and vertical clearances for all anticipated equipment, shielding, or painting containment systems.
- Sponsor developed plans shall indicate and clearly detail the site access requirements as well as the shielding and containment requirements necessary to complete the required bridge painting efforts.

5.7 Bridge Beautification and Landscaping

Requests by communities, agencies and other outside parties to undertake beautification projects involving NS undergrade bridges are considered on project specific basis. These projects include painting of undergrade bridges or landscaping on NS property. Please note that at no time will NS allow Banners or Signs to be attached to their bridge structures.

Safety remains the priority in all public projects and must be assessed with regards to how the project will affect the railroad and the public. Additionally, future maintenance of the beautification project must also be evaluated. NS requires these projects to be handled like all other projects, utilizing a PE agreement and review at the project design stage to determine railroad impacts and ensure safety.

A. Norfolk Southern Public Projects Contacts

Public Project Engineer	***Telephone***	***Email***	***States Assigned***
T.M. Bracey (Tom) System Engineer	o: 404-529-1641	thomas.bracey@nscorp.com	
D.S. Starling (Shawn)	o: 404-527-2536	douglas.starling@nscorp.com	New Jersey New York Pennsylvania
E.Mays (Ellis)	o: 404-529-1256	Ellis.Mays@nscorp.com	Illinois Indiana Iowa Missouri Tennessee
S.A. Overbey (Scott)	o: 404-582-5588	scott.overbey@nscorp.com	Delaware Maryland North Carolina Virginia West Virginia
J.B. Hobbs (Bryan)	o: 404-529-1436	james.hobbs@nscorp.com	Alabama Florida Georgia Louisiana Mississippi South Carolina
E.W. Chambers (E.W.)	o: 404-529-1251	Eldridge.Chambers@nscorp.com	Kentucky Michigan Ohio

B. Norfolk Southern System Map

See *Appendix J – List of Norfolk Southern Reference Documents* for a detailed System Map of Norfolk Southern's Operating Divisions

C. Norfolk Southern Schedule for Review of Public Projects

DISCLAIMER: The Review Schedules listed below are intended to serve as a guide for a typical project review and will vary depending on the complexity of the project.

C.1. Underpass Grade Separation
C.2. Overhead Grade Separation
C.3. Roadway Project – At Grade Crossing
C.4. Roadway Project Parallel Encroachment

UNDERPASS GRADE SEPARATION
SCHEDULE FOR REVIEW

TASK	DURATION	WEEKS PRIOR TO LETTING
SEND CONCEPT PACKAGE TO RAILROAD		52 WKS
ACKNOWLEDGE RECEIPT WITHIN 4 WEEKS		
	6 WKS	
RECEIVE RAILROAD ACCEPTANCE AND/OR COMMENTS OF CONCEPT PACKAGE		46 WKS
	6 WKS	
SUBMIT 30% PLAN PACKAGE TO RAILROAD		40 WKS
	6 WKS	
RECEIVE RAILROAD ACCEPTANCE AND/OR COMMENTS OF 30% PACKAGE		34 WKS
	6 WKS	
SUBMIT 60% PLAN PACKAGE TO RAILROAD		28 WKS
	6 WKS	
RECEIVE RAILROAD ACCEPTANCE AND/OR COMMENTS OF 60% PACKAGE		22 WKS
	6 WKS	
SUBMIT 100% PLAN PACKAGE TO RAILROAD		16 WKS
	4 WKS	
RECEIVE RAILROAD ACCEPTANCE AND/OR COMMENTS OF 100% PACKAGE		12 WKS
	2 WKS	
RECEIVE FORCE ACCOUNT ESTIMATE		10 WKS
	2 WKS	
*SEND AGREEMENT TO RAILROAD (12 WEEKS IF CONTRIBUTION REQUIRED)		8 WKS
	6 WKS	
RECEIVE SIGNED AGREEMENT FROM RAILROAD		2 WKS
	2 WKS	
READY TO LET		0 WKS

IT REQUIRES 30 WEEKS OF RAILROAD HANDLING TO PROCESS A TYPICAL UNDERPASS PROJECT TO LETTING WITHOUT CONTRIBUTION AND 36 WEEKS WITH CONTRIBUTION.

*If agreement is sent to railroad at an earlier date, agreement can be handled concurrently with other items thus reducing project handling as much as 8 weeks.

RAILROAD HANDLING SHOWN — FENCED

OVERHEAD GRADE SEPARATION
SCHEDULE FOR REVIEW

TASK	DURATION	WEEKS PRIOR TO LETTING
SEND CONCEPT PACKAGE TO RAILROAD		41 WKS
ACKNOWLEDGE RECEIPT WITHIN 4 WEEKS		
	5 WKS	
RECEIVE RAILROAD ACCEPTANCE AND/OR COMMENTS OF CONCEPT PACKAGE		36 WKS
	4 WKS	
SUBMIT 30% PLAN PACKAGE TO RAILROAD		32 WKS
	4 WKS	
RECEIVE RAILROAD ACCEPTANCE AND/OR COMMENTS OF 30% PACKAGE		28 WKS
	4 WKS	
SUBMIT 60% PLAN PACKAGE TO RAILROAD		24 WKS
	4 WKS	
RECEIVE RAILROAD ACCEPTANCE AND/OR COMMENTS OF 60% PACKAGE		20 WKS
	4 WKS	
SUBMIT 100% PLAN PACKAGE TO RAILROAD		16 WKS
	4 WKS	
RECEIVE RAILROAD ACCEPTANCE AND/OR COMMENTS OF 100% PACKAGE		12 WKS
	2 WKS	
RECEIVE FORCE ACCOUNT ESTIMATE		10 WKS
	2 WKS	
*SEND AGREEMENT TO RAILROAD (12 WEEKS IF CONTRIBUTION REQUIRED)		8 WKS
	6 WKS	
RECEIVE SIGNED AGREEMENT FROM RAILROAD		2 WKS
	2 WKS	
READY TO LET		0 WKS

IT REQUIRES 25 WEEKS OF RAILROAD HANDLING TO PROCESS A TYPICAL OVERHEAD BRIDGE PROJECT TO LETTING WITHOUT CONTRIBUTION AND 31 WEEKS WITH CONTRIBUTION.

*If agreement is sent to railroad at an earlier date, agreement can be handled concurrently with other items thus reducing project handling as much as 8 weeks.

RAILROAD HANDLING SHOWN — FENCED

ROADWAY PROJECT – AT GRADE CROSSING SCHEDULE FOR REVIEW

TASK	DURATION	WEEKS PRIOR TO LETTING
SEND CONCEPT PACKAGE TO RAILROAD		28 WKS
ACKNOWLEDGE RECEIPT WITHIN 2 WEEKS		
	4 WKS	
RECEIVE RAILROAD ACCEPTANCE AND/OR COMMENTS OF CONCEPT PACKAGE		24 WKS
	2 WKS	
SUBMIT 30% PLAN PACKAGE TO RAILROAD		22 WKS
	4 WKS	
RECEIVE RAILROAD ACCEPTANCE AND/OR COMMENTS OF 30% PACKAGE		18 WKS
	2 WKS	
SUBMIT 60% PLAN PACKAGE TO RAILROAD		16 WKS
	2 WKS	
RECEIVE RAILROAD ACCEPTANCE AND/OR COMMENTS OF 60% PACKAGE		14 WKS
	2 WKS	
SUBMIT 100% PLAN PACKAGE TO RAILROAD		12 WKS
	2 WKS	
RECEIVE RAILROAD ACCEPTANCE AND/OR COMMENTS OF 100% PACKAGE		10 WKS
	2 WKS	
RECEIVE FORCE ACCOUNT ESTIMATE		8 WKS
	2 WKS	
*SEND AGREEMENT TO RAILROAD (8 WEEKS IF CONTRIBUTION REQUIRED)		6 WKS
	4 WKS	
RECEIVE SIGNED AGREEMENT FROM RAILROAD		2 WKS
	2 WKS	
READY TO LET		0 WKS

IT REQUIRES 22 WEEKS OF RAILROAD HANDLING TO PROCESS A TYPICAL AT-GRADE CROSSING PROJECT TO LETTING WITHOUT CONTRIBUTION AND 26 WEEKS WITH CONTRIBUTION.

*If agreement is sent to railroad at an earlier date, agreement can be handled concurrently with other items thus reducing project handling as much as 8 weeks.

RAILROAD HANDLING SHOWN — FENCED

ROADWAY PROJECT – PARALLEL ENCROACHMENT SCHEDULE FOR REVIEW

TASK	DURATION	WEEKS PRIOR TO LETTING
SEND CONCEPT PACKAGE TO RAILROAD		28 WKS
ACKNOWLEDGE RECEIPT WITHIN 2 WEEKS		
	4 WKS	
RECEIVE RAILROAD ACCEPTANCE AND/OR COMMENTS OF CONCEPT PACKAGE		24 WKS
	2 WKS	
SUBMIT 30% PLAN PACKAGE TO RAILROAD		22 WKS
	4 WKS	
RECEIVE RAILROAD ACCEPTANCE AND/OR COMMENTS OF 30% PACKAGE		18 WKS
	2 WKS	
SUBMIT 60% PLAN PACKAGE TO RAILROAD		16 WKS
	2 WKS	
RECEIVE RAILROAD ACCEPTANCE AND/OR COMMENTS OF 60% PACKAGE		14 WKS
	2 WKS	
SUBMIT 100% PLAN PACKAGE TO RAILROAD		12 WKS
	2 WKS	
RECEIVE RAILROAD ACCEPTANCE AND/OR COMMENTS OF 100% PACKAGE		10 WKS
	2 WKS	
RECEIVE FORCE ACCOUNT ESTIMATE		8 WKS
	2 WKS	
*SEND AGREEMENT TO RAILROAD (8 WEEKS IF CONTRIBUTION REQUIRED)		6 WKS
	4 WKS	
RECEIVE SIGNED AGREEMENT FROM RAILROAD		2 WKS
	2 WKS	
READY TO LET		0 WKS

IT REQUIRES 22 WEEKS OF RAILROAD HANDLING TO PROCESS A TYPICAL PARALLEL ROADWAY ENCROACHMENT PROJECT TO LETTING WITHOUT CONTRIBUTION AND 26 WEEKS WITH CONTRIBUTION.

*If agreement is sent to railroad at an earlier date, agreement can be handled concurrently with other items thus reducing project handling as much as 8 weeks.

RAILROAD HANDLING SHOWN — FENCED

D. Norfolk Southern Project Data Sheets

The Project Data Sheets listed below shall be completed for every grade separation project and included with the Project Conceptual Package Submission.

D.1. Overhead Grade Separation Data Sheet
D.2. Underpass Grade Separation Data Sheet

OVERHEAD GRADE SEPARATION DATA SHEET
SHEET 1 of 2

1. Location: _____ _____ _____
   City County State

2. Distance from nearest Milepost to Centerline of Bridge:

   _____

3. Agency Project Number:

   _____

4. Description of Project:

   _____

   _____

5. Utilities on Railroad Property

Name	Type	Adjustments Required	Contact Person

6. List all the at-grade crossings that will be eliminated by the construction of this grade separation

Road Name	DOT#	Milepost	Signalized

7. Minimum Horizontal Clearance from Centerline of Nearest Track to Face of Pier?

   A. Proposed: _____ B. Existing (if Applicable:) _____

8. Minimum Vertical Clearance above top of high rail:

   A. Proposed: _____ B. Existing (if Applicable:) _____

OVERHEAD GRADE SEPARATION DATA SHEET
SHEET 2 of 2

9. List Piers where crashwalls are provided:

Pier:	Distance from centerline of track:
_____	_____
_____	_____
_____	_____

10. Describe how drainage from approach roadway is handled:

_____

_____

_____

11. Describe how drainage from bridge is handled:

_____

_____

_____

12. List Piers where shoring is required to protect track:

_____

_____

_____

13. Scheduled Letting Date:

_____

14. Anticipated Number of Flagging Days

_____

NOTES: Design criteria for Overhead Bridges apply to Items 7 through 12.
All information on this Data Sheet to be furnished by Submitting Project Sponsor and should be sent with initial transmittal of project notification.

UNDERPASS GRADE SEPARATION DATA SHEET
SHEET 1 of 2

1. Location: _____ _____ _____
   City County State

2. Distance from nearest Milepost to Centerline of Bridge:

   _____

3. Agency Project Number:

   _____

4. Description of Project:

   _____

   _____

   _____

5. Utilities on Railroad Property

Name	Type	Adjustments Required	Contact Person

6. List all the at-grade crossings that will be eliminated by the construction of this grade separation

Road Name	DOT#	Milepost	Signalized

7. How many spans are proposed? _____

8. Offset to temporary detour alignment: _____ _____ft.

UNDERPASS GRADE SEPARATION DATA SHEET
SHEET 2 of 2

9. Temporary Detour Alignment:

   On Embankment or Trestle?

   _____

10. Drainage:

    Describe how drainage from roadway is handled:

    _____

    _____

    _____

    Describe how drainage from bridge is handled:

    _____

    _____

    _____

11. Scheduled Letting Date:

    _____

12. Anticipated Number of Flagging Days:

    _____

NOTES: All information on this Data Sheet to be furnished by the Project Sponsor and should be sent with initial transmittal of project notification.

GRADE CROSSING DATA SHEET
SHEET 1 of 2

1. Location: _____ _____ _____
   City County State

   _____ _____
   AAR/DOT # Zip Code

2. Distance from nearest Milepost to Centerline of Crossing:

   _____

3. Agency Project Number:

   _____

4. Description of Project:

   _____

   _____

5. Utilities on Railroad Property

Name	Type	Adjustments Required	Contact Person

6. Is NS requested to resurface the crossing between the gauge of the track and 2' either side of rail?

   ☐ Yes ☐ No

7. Existing Crossing Surface Type:

   _____

8. Existing Advanced Warning Devices:

   _____

9. Will the existing advanced warning devices need updated to accommodate the proposed work:

   ☐ Yes ☐ No

GRADE CROSSING DATA SHEET
SHEET 2 of 2

10. Proposed updates to the existing advanced warning devices:

    _____

11. Does the crossing require widening to accommodate the proposed work?

    ☐ Yes ☐ No

12. Does the crossing require realignment to accommodate the proposed work?

    ☐ Yes ☐ No

13. Does a sidewalk exist at the crossing?

    ☐ Yes ☐ No

14. Is a sidewalk proposed as part of the project?

    ☐ Yes ☐ No

15. Describe how drainage from approach roadway is handled:

    _____

    _____

    _____

16. Scheduled Letting Date:

    _____

17. Anticipated Number of Flagging Days

    _____

NOTES: All information on this Data Sheet to be furnished by Submitting Project Sponsor and should be sent with initial transmittal of project notification.

E. Norfolk Southern – Special Provisions for Protection of Railway Interests

1. AUTHORITY OF RAILROAD ENGINEER AND SPONSOR ENGINEER:

   Norfolk Southern Railway Company, hereinafter referred to as "Railroad", and their authorized representative shall have final authority in all matters affecting the safe maintenance of railroad traffic including the adequacy of the foundations and structures supporting the railroad tracks. For Public Projects impacting the Railroad, the Railroad's Public Projects Engineer, hereinafter referred to as "Railroad Engineer", will serve as the authorized representative of the Railroad.

   The authorized representative of the Project Sponsor ("Sponsor"), hereinafter referred to as the "Sponsor's Engineer", shall have authority over all other matters as prescribed herein and in the Project Specifications.

   The Sponsor's Prime Contractor, hereinafter referred to as "Contractor" shall be responsible for completing any and all work in accordance with the terms prescribed herein and in the Project Specifications. These terms and conditions are subject to change without notice, from time to time in the sole discretion of the Railroad. Contractor must request from Railroad and follow the latest version of these provisions prior to commencing work.

2. NOTICE OF STARTING WORK:

   A. The Contractor shall not commence any work on railroad rights-of-way until he has complied with the following conditions:

      1. Signed and received a fully executed copy of the required Norfolk Southern Contractor Right of Entry Agreement.

      2. Given the Railroad written notice in electronic format to the Railroad Engineer, with copy to the Sponsor's Engineer who has been designated to be in charge of the work, at least ten days in advance of the date he proposes to begin work on Railroad rights-of-way.

      3. Obtained written approval from the Railroad of Railroad Protective Liability Insurance coverage as required by paragraph 14 herein. It should be noted that the Railroad does not accept notation of Railroad Protective insurance on a certificate of liability insurance form or Binders as Railroad must have the full original countersigned policy. Further, please note that mere receipt of the policy is not the only issue but review for compliance. Due to the number of projects system-wide, it typically takes a minimum of 30-45 days for the Railroad to review.

      4. Obtained Railroad's Flagging Services as required by paragraph 7 herein.

      5. Obtained written authorization from the Railroad to begin work on Railroad's rights-of-way, such authorization to include an outline of specific conditions with which he must comply.

      6. Furnished a schedule for all work within the Railroad's rights-of-way as required by paragraph 7.B.1.

B. The Railroad's written authorization to proceed with the work shall include the names, addresses, and telephone numbers of the Railroad's representatives who are to be notified as hereinafter required. Where more than one representative is designated, the area of responsibility of each representative shall be specified.

3. INTERFERENCE WITH RAILROAD OPERATIONS:

A. The Contractor shall so arrange and conduct his work that there will be no interference with Railroad's operations, including train, signal, telephone and telegraphic services, or damage to the property of the Railroad or to poles, wires, and other facilities of tenants on the rights-of-way of the Railroad. Whenever work is liable to affect the operations or safety of trains, the method of doing such work shall first be submitted to the Railroad Engineer for approval, but such approval shall not relieve the Contractor from liability. Any work to be performed by the Contractor which requires flagging service or inspection service shall be deferred by the Contractor until the flagging service or inspection service required by the Railroad is available at the job site.

B. Whenever work within Railroad's rights-of-way is of such a nature that impediment to Railroad's operations such as use of runaround tracks or necessity for reduced speed is unavoidable, the Contractor shall schedule and conduct his operations so that such impediment is reduced to the absolute minimum.

C. Should conditions arising from, or in connection with the work, require that immediate and unusual provisions be made to protect operations and property of the Railroad, the Contractor shall make such provisions. If in the judgment of the Railroad Engineer, or in his absence, the Railroad's Division Engineer, such provisions is insufficient, either may require or provide such provisions as he deems necessary. In any event, such unusual provisions shall be at the Contractor's expense and without cost to the Railroad or the Sponsor.

D. "One Call" Services do not locate buried Railroad utilities. The contractor shall contact the Railroad's representative 2 days in advance of work at those places where excavation, pile driving, or heavy loads may damage the Railroad's underground facilities. Upon request from the Contractor or Sponsor, Railroad forces will locate and paint mark or flag the Railroad's underground facilities. The Contractor shall avoid excavation or other disturbances of these facilities. If disturbance or excavation is required near a buried Railroad facility, the contractor shall coordinate with the Railroad to have the facility potholed manually with careful hand excavation. The facility shall be protected by the Contractor during the course of the disturbance under the supervision and direction of the Railroad's representative.

4. TRACK CLEARANCES:

A. The minimum track clearances to be maintained by the Contractor during construction are shown on the Project Plans. If temporary clearances are not shown on the project plans, the following criteria shall govern the use of falsework and formwork above or adjacent to operated tracks.

1. A minimum vertical clearance of 22'-0" above top of highest rail shall be maintained at all times.

2. A minimum horizontal clearance of 13'-0" from centerline of tangent track or 14'-0" from centerline of curved track shall be maintained at all times. Additional horizontal

clearance may be required in special cases to be safe for operating conditions. This additional clearance will be as determined by the Railroad Engineer.

3. All proposed temporary clearances which are less than those listed above must be submitted to Railroad Engineer for approval prior to construction and must also be authorized by the regulatory body of the State if less than the legally prescribed clearances.

4. The temporary clearance requirements noted above shall also apply to all other physical obstructions including, but not limited to: stockpiled materials, parked equipment, placement or driving of piles, and bracing or other construction supports.

B. Before undertaking any work within Railroad right-of-way, and before placing any obstruction over any track, the Contractor shall:

1. Notify the Railroad's representative at least 72 hours in advance of the work.

2. Receive assurance from the Railroad's representative that arrangements have been made for flagging service as may be necessary.

3. Receive permission from the Railroad's representative to proceed with the work.

4. Ascertain that the Sponsor's Engineer has received copies of notice to the Railroad and of the Railroad's response thereto.

5. CONSTRUCTION PROCEDURES:

A. General:

1. Construction work and operations by the Contractor on Railroad property shall be:

a. Subject to the inspection and approval of the Railroad Engineer or their designated Construction Engineering Representative.

b. In accordance with the Railroad's written outline of specific conditions.

c. In accordance with the Railroad's general rules, regulations and requirements including those relating to safety, fall protection and personal protective equipment.

d. In accordance with these Special Provisions.

2. Submittal Requirements

a. The Contractor shall submit all construction related correspondence and submittals electronically to the Railroad Engineer.

b. The Contractor shall allow for 30 days for the Railroad's review and response.

c. All work in the vicinity of the Railroad's property that has the potential to affect the Railroad's train operations or disturb the Railroad's Property must be submitted and approved by the Railroad prior to work being performed.

d. All submittals and calculations must be signed and sealed by a registered engineer licensed in the state of the project work.

e. All submittals shall first be approved by the Sponsor's Engineer and the Railroad Engineer, but such approval shall not relieve the Contractor from liability.

f. For all construction projects, the following submittals, but not limited to those listed below, shall be provided for review and approval when applicable:

(1) General Means and Methods
(2) Ballast Protection
(3) Construction Excavation & Shoring
(4) Pipe, Culvert, & Tunnel Installations
(5) Demolition Procedure
(6) Erection & Hoisting Procedure
(7) Debris Shielding or Containment
(8) Blasting
(9) Formwork for the bridge deck, diaphragms, overhang brackets, and protective platforms
(10) Bent Cap Falsework. A lift plan will be required if the contractor want to move the falsework over the tracks.

g. For Undergrade Bridges (Bridges carrying the Railroad) the following submittals in addition to those listed above shall be provided for review and approval:

(1) Shop Drawings
(2) Bearing Shop Drawings and Material Certifications
(3) Concrete Mix Design
(4) Structural Steel, Rebar, and/or Strand Certifications
(5) 28 day Cylinder Test for Concrete Strength
(6) Waterproofing Material Certification
(7) Test Reports for Fracture Critical Members
(8) Foundation Construction Reports

Fabrication may not begin until the Railroad has approved the required shop drawings.

h. The Contractor shall include in all submissions a detailed narrative indicating the progression of work with the anticipated timeframe to complete each task. Work will not be permitted to commence until the Contractor has provided the Railroad with a satisfactory plan that the project will be undertaken without scheduling, performance or safety related issues. Submission shall also provide a listing of the anticipated equipment to be used, the location of all equipment to be used and insure a contingency plan of action is in place should a primary piece of equipment malfunction.

B. Ballast Protection

1. The Contractor shall submit the proposed ballast protection system detailing the specific filter fabric and anchorage system to be used during all construction activities.

2. The ballast protection is to extend 25' beyond the proposed limit of work, be installed at the start of the project and be continuously maintained to prevent all contaminants from entering the ballast section of all tracks for the entire duration of the project.

C. Excavation:

1. The subgrade of an operated track shall be maintained with edge of berm at least 10'-0" from centerline of track and not more than 24-inches below top of rail. Contractor will not be required to make existing section meet this specification if substandard, in which case existing section will be maintained.

2. Additionally, the Railroad will require the installation of an OSHA approved handrail and orange construction safety fencing for all excavations of the Railroad right-of-way.

D. Excavation for Structures and Shoring Protection:

1. The Contractor will be required to take special precaution and care in connection with excavating and shoring pits, and in driving piles or sheeting for footings adjacent to tracks to provide adequate lateral support for the tracks and the loads which they carry, without disturbance of track alignment and surface, and to avoid obstructing track clearances with working equipment, tools or other material.

2. All plans and calculations for shoring shall be prepared, signed, and sealed by a Registered Professional Engineer licensed in the state of the proposed project, in accordance with Norfolk Southern's Overhead Grade Separation Design Criteria, subsection H.1.6.E-Construction Excavation (Refer to Norfolk Southern Public Projects Manual Appendix H). The Registered Professional Engineer will be responsible for the accuracy for all controlling dimensions as well as the selection of soil design values which will accurately reflect the actual field conditions.

3. The Contractor shall provide a detailed installation and removal plan of the shoring components. Any component that will be installed via the use of a crane or any other lifting device shall be subject to the guidelines outlined in section 5.G of these provisions.

4. The Contractor shall be required to survey the track(s) and Railroad embankment and provide a cross section of the proposed excavation in relation to the tracks.

5. Calculations for the proposed shoring should include deflection calculations. The maximum deflection for excavations within 18'-0" of the centerline of the nearest track shall be 3/8". For all other cases, the max deflection shall not exceed ½".

6. Additionally, the Railroad will require the installation of an OSHA approved handrail and orange construction safety fencing for all excavations of the Railroad right-of-way.

7. The front face of shoring located to the closet NS track for all shoring set-ups located in Zone 2 as shown on NS Typical Drawing No. 4 – Shoring Requirements (Appendix I) shall remain in place and be cut off 2'-0" below the final ground elevation. The remaining shoring in Zone 2 and all shoring in Zone 1 may be removed and all voids must be backfilled with flowable fill.

E. Pipe, Culvert, & Tunnel Installations

1. Pipe, Culvert, & Tunnel Installations shall be in accordance with the appropriate Norfolk Southern Design Specification as noted below:

    a. For Open Cut Method refer to Norfolk Southern Public Projects Manual Appendix H.4.6.
    b. For Jack and Bore Method refer to Norfolk Southern Public Projects Manual Appendix H.4.7.
    c. For Tunneling Method refer to Norfolk Southern Public Projects Manual Appendix H.4.8.

2. The installation methods provided are for pipes carrying storm water or open flow run-off. All other closed pipeline systems shall be installed in accordance Norfolk Southern's Pipe and Wire Program and the NSCE-8

F. Demolition Procedures

1. General

    a. Demolition plans are required for all spans over the track(s), for all spans adjacent to the track(s), if located on (or partially on) Railroad right-of-way; and in all situations where cranes will be situated on, over, or adjacent to Railroad right-of-way and within a distance of the boom length plus 15'-0" from the centerline of track.

    b. Railroad tracks and other Railroad property must be protected from damage during the procedure.

    c. A pre-demolition meeting shall be conducted with the Sponsor, the Railroad Engineer or their representative, and the key Contractor's personnel prior to the start of the demolition procedure.

    d. The Railroad Engineer or his designated representative must be present at the site during the entire demolition procedure period.

    e. Existing, obsolete, bridge piers shall be removed to a sufficient depth below grade to enable restoration of the existing/proposed track ditch, but in no case less than 2'-0" below final grade.

2. Submittal Requirements

    a. In addition to the submittal requirements outlined in Section 5.A.2 of these provisions, the Contractor shall submit the following for approval by the Railroad Engineer:

        (1) A plan showing the location of cranes, horizontally and vertically, operating radii, with delivery or disposal locations shown. The location of all tracks and other Railroad facilities as well as all obstructions such as wire lines, poles, adjacent structures, etc. must also be shown.

(2) Rating sheets showing cranes or lifting devices to be adequate for 150% of the actual weight of the pick, including all rigging components. A complete set of crane charts, including crane, counterweight, and boom nomenclature is to be submitted. Safety factors that may have been "built-in" to the crane charts are not to be considered when determining the 150% factor of safety.

(3) Plans and computations showing the weight of the pick must be submitted. Calculations shall be made from plans of the existing structure showing complete and sufficient details with supporting data for the demolition the structure. If plans do not exist, lifting weights must be calculated from field measurements. The field measurements are to be made under the supervision of the Registered Professional Engineer submitting the procedure and calculations.

(4) The Contractor shall provide a sketch of all rigging components from the crane's hook block to the beam. Catalog cuts or information sheets of all rigging components with their lifting capacities shall be provided. All rigging must be adequate for 150% of the actual weight of the pick. Safety factors that may have been "built-in" to the rating charts are not to be considered when determining the 150% factor of safety. All rigging components shall be clearly identified and tagged with their rated lifting capacities. The position of the rigging in the field shall not differ from what is shown on the final plan without prior review from the Sponsor and the Railroad.

(5) A complete demolition procedure, including the order of lifts, time required for each lift, and any repositioning or re-hitching of the crane or cranes.

(6) Design and supporting calculations for the temporary support of components, including but not limited to the stability of the superstructure during the temporary condition, temporary girder tie-downs and falsework.

3. Overhead Demolition Debris Shield

a. The demolition debris shield shall be installed prior to the demolition of the bridge deck or other relevant portions of the superstructure over the track area to catch all falling debris.

b. The demolition debris shield shall provide a minimum vertical clearance as specified in Section 4.A.1 of these provisions or maintain the existing vertical clearance if the existing clearance is less than that specified in Section 4.A.1.

c. The Contractor shall include the demolition debris shield installation/removal means and methods as part of the proposed Demolition procedure submission.

d. The Contractor shall submit the demolition debris shield design and supporting calculations for approval by the Railroad Engineer.

e. The demolition debris shield shall have a minimum design load of 50 pounds per square foot plus the weight of the equipment, debris, personnel, and other loads to be carried.

f. The Contractor shall include the proposed bridge deck removal procedure in its demolition means and methods and shall verify that the size and quantity of the demolition debris generated by the procedure does not exceed the shield design loads.

g. The Contractor shall clean the demolition debris shield daily or more frequently as dictated either by the approved design parameters or as directed by the Railroad Engineer.

4. Vertical Demolition Debris Shield

a. A vertical demolition debris shield may be required for substructure removals in close proximity to the Railroad's track and other facilities, as determined by the Railroad Engineer.

G. Erection & Hoisting Procedures

1. General

a. Erection plans are required for all spans over the track(s), for all spans adjacent to the track(s), if located on (or partially on) Railroad right-of-way; and in all situations where cranes will be situated on, over, or adjacent to Railroad right-of-way and within a distance of the boom length plus 15'-0" from the centerline of track.

b. Railroad tracks and other Railroad property must be protected from damage during the erection procedure.

c. A pre-erection meeting shall be conducted with the Sponsor, the Railroad Engineer or their representative, and the key Contractor's personnel prior to the start of the erection procedure.

d. The Railroad Engineer or his designated representative must be present at the site during the entire erection procedure period.

e. For field splices located over Railroad property, a minimum of 50% of the holes for each connection shall be filled with bolts or pins prior to releasing the crane. A minimum of 50% of the holes filled shall be filled with bolts. All bolts must be appropriately tightened. Any changes to previously approved field splice locations must be submitted to the Railroad for review and approval. Refer to Norfolk Southern's Overhead Grade Separation Design Criteria for additional splice details (Norfolk Southern Public Projects Manual Appendix H.1, Section 4.A.3.).

2. Submittal Requirements

a. In addition the submittal requirements outlined in Section 5.A.2 of these provisions, the Contractor shall submit the following for approval by the Railroad Engineer:

(1) As-built beam seat elevations - All as-built bridge seats and top of rail elevations shall be furnished to the Railroad Engineer for review and verification at least 30 days in advance of the erection, to ensure that minimum vertical clearances as approved in the plans will be achieved.

(2) A plan showing the location of cranes, horizontally and vertically, operating radii, with delivery or staging locations shown. The location of all tracks and other Railroad facilities as well as all obstructions such as wire lines, poles, adjacent structures, etc. must also be shown.

(3) Rating sheets showing cranes or lifting devices to be adequate for 150% of the actual weight of the pick, including all rigging components. A complete set of crane charts, including crane, counterweight, and boom nomenclature is to be submitted. Safety factors that may have been "built-in" to the crane charts are not to be considered when determining the 150% factor of safety.

(4) Plans and computations showing the weight of the pick must be submitted. Calculations shall be made from plans of the proposed structure showing complete and sufficient details with supporting data for the erection of the structure. If plans do not exist, lifting weights must be calculated from field measurements. The field measurements are to be made under the supervision of the Registered Professional Engineer submitting the procedure and calculations.

(5) The Contractor shall provide a sketch of all rigging components from the crane's hook block to the beam. Catalog cuts or information sheets of all rigging components with their lifting capacities shall be provided. All rigging must be adequate for 150% of the actual weight of the pick. Safety factors that may have been "built-in" to the rating charts are not to be considered when determining the 150% factor of safety. All rigging components shall be clearly identified and tagged with their rated lifting capacities. The position of the rigging in the field shall not differ from what is shown on the final plan without prior review from the Sponsor and the Railroad.

(6) A complete erection procedure, including the order of lifts, time required for each lift, and any repositioning or re-hitching of the crane or cranes.

(7) Design and supporting calculations for the temporary support of components, including but not limited to temporary girder tie-downs and falsework.

H. Blasting:

1. The Contractor shall obtain advance approval of the Railroad Engineer and the Sponsor Engineer for use of explosives on or adjacent to Railroad property. The request for permission to use explosives shall include a detailed blasting plan. If permission for use of explosives is granted, the Contractor will be required to comply with the following:

    a. Blasting shall be done with light charges under the direct supervision of a responsible officer or employee of the Contractor and a licensed blaster.

    b. Electric detonating fuses shall not be used because of the possibility of premature explosions resulting from operation of two-way radios.

    c. No blasting shall be done without the presence of the Railroad Engineer or his authorized representative. At least 72 hours advance notice to the person designated in the Railroad's notice of authorization to proceed (see paragraph 2.B) will be required to arrange for the presence of an authorized Railroad representative and such flagging as the Railroad may require.

    d. Have at the job site adequate equipment, labor and materials and allow sufficient time to clean up debris resulting from the blasting without delay to trains, as well as correcting at his expense any track misalignment or other damage to Railroad property resulting from the blasting as directed by the Railway's authorized representative. If his actions result in delay of trains, the Contractor shall bear the entire cost thereof.

    e. The blasting Contractor shall have a copy of the approved blasting plan on hand while on the site.

    f. Explosive materials or loaded holes shall not be left unattended at the blast site.

    g. A seismograph shall be placed on the track shoulder adjacent to each blast which will govern the peak particle velocity of <u>two inches per second</u>. Measurement shall also be taken on the ground adjacent to structures as designated by a qualified and independent blasting consultant. The Railroad reserves the option to direct the placement of additional seismographs at structures or other locations of concern, without regard to scaled distance.

    h. After each blast, the blasting Contractor shall provide a copy of their drill log and blast report, which includes number of holes, depth of holes, number of decks, type and pounds of explosives used per deck.

    i. The Railroad may require top of rail elevations and track centers taken before, during and after the blasting and excavation operation to check for any track misalignment resulting from the Contractor's activities.

2. The Railroad representative will:

    a. Determine approximate location of trains and advise the Contractor the appropriate amount of time available for the blasting operation and clean up.

b. Have the authority to order discontinuance of blasting if, in his opinion, blasting is too hazardous or is not in accord with these special provisions.

3. The Contractor must hire, at no expense to the Railroad, a qualified and independent blasting consultant to oversee the use of explosives. The blasting consultant will:

   a. Review the Contractor's proposed drilling and loading patterns, and with the blasting consultant's personnel and instruments, monitor the blasting operations.

   b. Confirm that the minimum amounts of explosives are used to remove the rock.

   c. Be empowered to intercede if he concludes that the Contractor's blasting operations are endangering the Railway.

   d. Submit a letter acknowledging that he has been engaged to oversee the entire blasting operation and that he approves of the blasting plan.

   e. Furnish copies of all vibration readings to the Railroad representative immediately after each blast. The representative will sign and date the seismograph tapes after each shot to verify the readings are for that specific shot.

   f. Advise the Railroad representative as to the safety of the operation and notify him of any modifications to the blasting operation as the work progresses.

4. The request for permission to use explosives on the Railroad's Right-of-Way shall include a blasting proposal providing the following details:

   a. A drawing which shows the proposed blasting area, location of nearest hole and distance to Railway structures, all with reference to the centerline of track.

   b. Hole diameter.

   c. Hole spacing and pattern.

   d. Maximum depth of hole.

   e. Maximum number of decks per hole.

   f. Maximum pounds of explosives per hole.

   g. Maximum pounds of explosives per delay.

   h. Maximum number of holes per detonation.

   i. Type of detonator and explosives to be used. (Electronic detonating devices will not be permitted). Diameter of explosives if different from hole diameter.

   j. Approximate dates and time of day when the explosives are to be detonated.

   k. Type of flyrock protection.

l. Type and patterns of audible warning and all clear signals to be used before and after each blast.

m. A copy of the blasting license and qualifications of the person directly in charge of the blasting operation, including their name, address and telephone number.

n. A copy of the Authority's permit granting permission to blast on the site.

o. A letter from the blasting consultant acknowledging that he has been engaged to oversee the entire blasting operation and that he approves of the blasting plan.

p. In addition to the insurance requirements outlined in Paragraph 14 of these Provisions, A certificate of insurance from the Contractor's insurer stating the amount of coverage for XCU (Explosive Collapse and Underground Hazard) insurance and that XCU Insurance is in force for this project.

q. A copy of the borings and Geotechnical information or report.

I. Track Monitoring

1. At the direction of the Railroad Engineer, any activity that has the potential to disturb the Railroad track structure may require the Contractor to submit a detailed track monitoring program for approval by the Railroad Engineer.

2. The program shall specify the survey locations, the distance between the location points, and frequency of monitoring before, during, and after construction. Railroad reserves the right to modify the survey locations and monitoring frequency as necessary during the project.

3. The survey data shall be collected in accordance with the approved frequency and immediately furnished to the Railroad Engineer for analysis.

4. If any movement has occurred as determined by the Railroad Engineer, the Railroad will be immediately notified. Railroad, at its sole discretion, shall have the right to immediately require all Contractor operations to be ceased and determine what corrective action is required. Any corrective action required by the Railroad or performed by the Railroad including the monitoring of corrective action of the Contractor will be at project expense.

J. Maintenance of Railroad Facilities:

1. The Contractor will be required to maintain all ditches and drainage structures free of silt or other obstructions which may result from his operations and provide and maintain any erosion control measures as required. The Contractor will promptly repair eroded areas within Railroad rights-of-way and repair any other damage to the property of the Railroad or its tenants.

2. If, in the course of construction, it may be necessary to block a ditch, pipe or other drainage facility, temporary pipes, ditches or other drainage facilities shall be installed to maintain adequate drainage, as approved by the Railroad Engineer. Upon completion

of the work, the temporary facilities shall be removed and the permanent facilities restored.

3. All such maintenance and repair of damages due to the Contractor's operations shall be done at the Contractor's expense.

K. Storage of Materials and Equipment:

1. Materials and equipment shall not be stored where they will interfere with Railroad operations, nor on the rights-of-way of the Railroad without first having obtained permission from the Railroad Engineer, and such permission will be with the understanding that the Railroad will not be liable for damage to such material and equipment from any cause and that the Railroad Engineer may move or require the Contractor to move, at the Contractor's expense, such material and equipment.

2. All grading or construction machinery that is left parked near the track unattended by a watchman shall be effectively immobilized so that it cannot be moved by unauthorized persons. The Contractor shall protect, defend, indemnify and save Railroad, and any associated, controlled or affiliated corporation, harmless from and against all losses, costs, expenses, claim or liability for loss or damage to property or the loss of life or personal injury, arising out of or incident to the Contractor's failure to immobilize grading or construction machinery.

L. Cleanup:

1. Upon completion of the work, the Contractor shall remove from within the limits of the Railroad rights-of-way, all machinery, equipment, surplus materials, falsework, rubbish or temporary buildings of the Contractor, and leave said rights-of-way in a neat condition satisfactory to the Railroad Engineer or his authorized representative.

6. DAMAGES:

A. The Contractor shall assume all liability for any and all damages to his work, employees, servants, equipment and materials caused by Railroad traffic.

B. Any cost incurred by the Railroad for repairing damages to its property or to property of its tenants, caused by or resulting from the operations of the Contractor, shall be paid directly to the Railroad by the Contractor.

7. FLAGGING SERVICES:

A. Requirements:

1. Flagging services will not be provided until the Contractor's insurance has been reviewed & approved by the Railroad.

2. Under the terms of the agreement between the Sponsor and the Railroad, the Railroad has sole authority to determine the need for flagging required to protect its operations. In general, the requirements of such services will be whenever the Contractor's personnel or equipment are or are likely to be, working on the Railroad's right-of-way, or across, over, adjacent to, or under a track, or when such work has disturbed or is likely to disturb a Railroad structure or the Railroad roadbed or

surface and alignment of any track to such extent that the movement of trains must be controlled by flagging.

3. Normally, the Railroad will assign one flagman to a project; but in some cases, more than one may be necessary, such as yard limits where three (3) flagmen may be required. However, if the Contractor works within distances that violate instructions given by the Railroad's authorized representative or performs work that has not been scheduled with the Railroad's authorized representative, a flagman or flagmen may be required full time until the project has been completed.

4. For Projects exceeding 30 days of construction, Contractor shall provide the flagmen a small work area with a desk/counter and chair within the field/site trailer, including the use of bathroom facilities, where the flagman can check in/out with the Project, as well as to the flagman's home terminal. The work area should provide access to two (2) electrical outlets for recharging radio(s), and a laptop computer; and have the ability to print off needed documentation and orders as needed at the field/site trailer. This should aid in maximizing the flagman's time and efficiency on the Project.

B. Scheduling and Notification:

1. The Contractor's work requiring Railroad flagging should be scheduled to limit the presence of a flagman at the site to a maximum of 50 hours per week. The Contractor shall receive Railroad approval of work schedules requiring a flagman's presence in excess of 40 hours per week.

2. Not later than the time that approval is initially requested to begin work on Railroad right-of-way, Contractor shall furnish to the Railroad and the Sponsor a schedule for all work required to complete the portion of the project within Railroad right-of-way and arrange for a job site meeting between the Contractor, the Sponsor, and the Railroad's authorized representative. Flagman or Flagmen may not be provided until the job site meeting has been conducted and the Contractor's work scheduled.

3. The Contractor will be required to give the Railroad representative at least 10 working days of advance written notice of intent to begin work within Railroad right-of-way in accordance with this special provision. Once begun, when such work is then suspended at any time, or for any reason, the Contractor will be required to give the Railroad representative at least 3 working days of advance notice before resuming work on Railroad right-of-way. Such notices shall include sufficient details of the proposed work to enable the Railroad representative to determine if flagging will be required. If such notice is in writing, the Contractor shall furnish the Engineer a copy; if notice is given verbally, it shall be confirmed in writing with copy to the Engineer. If flagging is required, no work shall be undertaken until the flagman, or flagmen are present at the job site. It may take up to 30 days to obtain flagging initially from the Railroad. When flagging begins, the flagman is usually assigned by the Railroad to work at the project site on a continual basis until no longer needed and cannot be called for on a spot basis. If flagging becomes unnecessary and is suspended, it may take up to 30 days to again obtain from the Railroad. Due to Railroad labor agreements, it is necessary to give 5 working days notice before flagging service may be discontinued and responsibility for payment stopped.

4. If, after the flagman is assigned to the project site, an emergency arises that requires the flagman's presence elsewhere, then the Contractor shall delay work on Railroad right-of-way until such time as the flagman is again available. Any additional costs resulting from such delay shall be borne by the Contractor and not the Sponsor or Railroad.

C. Payment:

1. The Sponsor will be responsible for paying the Railroad directly for any and all costs of flagging which may be required to accomplish the construction.

2. The estimated cost of flagging is the current rate per day based on a 10-hour work day. This cost includes the base pay for the flagman, overhead, and includes a per diem charge for travel expenses, meals and lodging. The charge to the Sponsor by the Railroad will be the actual cost based on the rate of pay for the Railroad's employees who are available for flagging service at the time the service is required.

3. Work by a flagman in excess of 8 hours per day or 40 hours per week, but not more than 12 hours a day will result in overtime pay at 1 and 1/2 times the appropriate rate. Work by a flagman in excess of 12 hours per day will result in overtime at 2 times the appropriate rate. If work is performed on a holiday, the flagging rate is 2 and 1/2 times the normal rate.

4. Railroad work involved in preparing and handling bills will also be charged to the Sponsor. Charges to the Sponsor by the Railroad shall be in accordance with applicable provisions of Subchapter B, Part 140, Subpart I and Subchapter G, Part 646, Subpart B of the Federal-Aid Policy Guide issued by the Federal Highway Administration on December 9, 1991, including all current amendments. Flagging costs are subject to change. The above estimates of flagging costs are provided for information only and are not binding in any way.

D. Verification:

1. Railroad's flagman will electronically enter flagging time via Railroad's electronic billing system. Any complaints concerning flagging must be resolved in a timely manner. If the need for flagging is questioned, please contact the Railroad Engineer. All verbal complaints will be confirmed in writing by the Contractor within 5 working days with a copy to the Sponsor's Engineer. Address all written correspondence electronically to Railroad Engineer.

2. The Railroad flagman assigned to the project will be responsible for notifying the Sponsor Engineer upon arrival at the job site on the first day (or as soon thereafter as possible) that flagging services begin and on the last day that he performs such services for each separate period that services are provided. The Sponsor's Engineer will document such notification in the project records. When requested, the Sponsor's Engineer will also sign the flagman's diary showing daily time spent and activity at the project site.

8. HAUL ACROSS RAILROAD TRACK:

A. Where the plans show or imply that materials of any nature must be hauled across Railroad's track, unless the plans clearly show that the Sponsor has included arrangements for such

haul in its agreement with the Railroad, the Contractor will be required to make all necessary arrangements with the Railroad regarding means of transporting such materials across the Railroad's track. The Contractor or Sponsor will be required to bear all costs incidental to such crossings whether services are performed by his own forces or by Railroad personnel.

B. No crossing may be established for use of the Contractor for transporting materials or equipment across the tracks of the Railroad unless specific authority for its installation, maintenance, necessary watching and flagging thereof and removal, until a temporary private crossing agreement has been executed between the Contractor and Railroad. The approval process for an agreement normally takes 90 days.

9. WORK FOR THE BENEFIT OF THE CONTRACTOR:

A. All temporary or permanent changes in wire lines or other facilities which are considered necessary to the project are shown on the plans; included in the force account agreement between the Sponsor and the Railroad or will be covered by appropriate revisions to same which will be initiated and approved by the Sponsor and/or the Railroad.

B. Should the Contractor desire any changes in addition to the above, then he shall make separate arrangements with the Railroad for same to be accomplished at the Contractor's expense.

10. COOPERATION AND DELAYS:

A. It shall be the Contractor's responsibility to arrange a schedule with the Railroad for accomplishing stage construction involving work by the Railroad or tenants of the Railroad. In arranging his schedule he shall ascertain, from the Railroad, the lead time required for assembling crews and materials and shall make due allowance therefore.

B. No charge or claim of the Contractor against either the Sponsor or the Railroad will be allowed for hindrance or delay on account of railroad traffic; any work done by the Railroad or other delay incident to or necessary for safe maintenance of railroad traffic or for any delays due to compliance with these special provisions.

11. TRAINMAN'S WALKWAYS:

A. Along the outer side of each exterior track of multiple operated track, and on each side of single operated track, an unobstructed continuous space suitable for trainman's use in walking along trains, extending to a line not less than 10 feet from centerline of track, shall be maintained. Any temporary impediments to walkways and track drainage encroachments or obstructions allowed during work hours while Railroad's protective service is provided shall be removed before the close of each work day. If there is any excavation near the walkway, a handrail, with 10'-0" minimum clearance from centerline of track, shall be placed and must conform to AREMA and/or FRA standards.

12. GUIDELINES FOR PERSONNEL ON RAILROAD RIGHT-OF-WAY:

A. The Contractor and/or the Sponsor's personnel authorized to perform work on Railroad's property as specified in Section 2 above are not required to complete Norfolk Southern Roadway Worker Protection Training; However the Contractor and the Sponsor's personnel must be familiar with Norfolk Southern's standard operating rules and guidelines, should conduct themselves accordingly, and may be removed from the property for failure to follow these guidelines.

B. All persons shall wear hard hats. Appropriate eye and hearing protection must be used. Working in shorts is prohibited. Shirts must cover shoulders, back and abdomen. Working in tennis or jogging shoes, sandals, boots with high heels, cowboy and other slip-on type boots is prohibited. Hard-sole, lace-up footwear, zippered boots or boots cinched up with straps which fit snugly about the ankle are adequate. Wearing of safety boots is strongly recommended. In the vicinity of at-grade crossings, it is strongly recommended that reflective vests be worn.

C. No one is allowed within 25' of the centerline of track without specific authorization from the flagman.

D. All persons working near track while train is passing are to lookout for dragging bands, chains and protruding or shifted cargo.

E. No one is allowed to cross tracks without specific authorization from the flagman.

F. All welders and cutting torches working within 25' of track must stop when train is passing.

G. No steel tape or chain will be allowed to cross or touch rails without permission from the Railroad.

13. GUIDELINES FOR EQUIPMENT ON RAILROAD RIGHT-OF-WAY:

A. No crane or boom equipment will be allowed to set up to work or park within boom distance plus 15' of centerline of track without specific permission from Railroad official and flagman.

B. No crane or boom equipment will be allowed to foul track or lift a load over the track without flag protection and track time.

C. All employees will stay with their machines when crane or boom equipment is pointed toward track.

D. All cranes and boom equipment under load will stop work while train is passing (including pile driving).

E. Swinging loads must be secured to prevent movement while train is passing.

F. No loads will be suspended above a moving train.

G. No equipment will be allowed within 25' of centerline of track without specific authorization of the flagman.

H. Trucks, tractors or any equipment will not touch ballast line without specific permission from Railroad official and flagman. Orange construction fencing may be required as directed.

I. No equipment or load movement within 25' or above a standing train or Railroad equipment without specific authorization of the flagman.

J. All operating equipment within 25' of track must halt operations when a train is passing. All other operating equipment may be halted by the flagman if the flagman views the operation to be dangerous to the passing train.

K. All equipment, loads and cables are prohibited from touching rails.

L. While clearing and grubbing, no vegetation will be removed from Railroad embankment with heavy equipment without specific permission from the Railroad Engineer and flagman.

M. No equipment or materials will be parked or stored on Railroad's property unless specific authorization is granted from the Railroad Engineer.

N. All unattended equipment that is left parked on Railroad property shall be effectively immobilized so that it cannot be moved by unauthorized persons.

O. All cranes and boom equipment will be turned away from track after each work day or whenever unattended by an operator.

P. Prior to performing any crane operations, the Contractor shall establish a single point of contact for the Railroad flagman to remain in communication with at all times. Person must also be in direct contact with the individual(s) directing the crane operation(s).

14. INSURANCE:

A. In addition to any other forms of insurance or bonds required under the terms of the contract and specifications, the Prime Contractor will be required to carry insurance of the following kinds and amounts:

1. a. Commercial General Liability Insurance having a combined single limit of not less than $2,000,000 per occurrence for all loss, damage, cost and expense, including attorneys' fees, arising out of bodily injury liability and property damage liability during the policy period. Said policy shall include explosion, collapse, and underground hazard (XCU) coverage, shall be endorsed to name Railroad specified in item A.2.c. below both as the certificate holder and as an additional insured, and shall include a severability of interests provision.

   b. Automobile Liability Insurance with a combined single limit of not less than $1,000,000 each occurrence for injury to or death of persons and damage to or loss or destruction of property. Said policy or policies shall be endorsed to name Railroad specified in item A.2.c. below both as the certificate holder and as an additional insured and shall include a severability of interests provision.

2. Railroad Protective Liability Insurance having a combined single limit of not less than $2,000,000 each occurrence and $6,000,000 in the aggregate applying separately to each annual period. If the project involves track over which passenger trains operate, the insurance limits required are not less than a combined single limit of $5,000,000 each occurrence and $10,000,000 in the aggregate applying separately to each annual period. Said policy shall provide coverage for all loss, damage or expense arising from bodily injury and property damage liability, and physical damage to property attributed to acts or omissions at the job site.

   The standards for the Railroad Protective Liability Insurance are as follows:

a. The insurer must be rated A- or better by A.M. Best Railroad, Inc.
NOTE: NS does not accept from insurers Chartis (AIG or Affiliated Company including Lexington Insurance Company), Hudson Group or ACE or Affiliated Company.

b. The policy must be written using one of the following combinations of Insurance Services Office ("ISO") Railroad Protective Liability Insurance Form Numbers:
   (1) CG 00 35 01 96 and CG 28 31 10 93; or
   (2) CG 00 35 07 98 and CG 28 31 07 98; or
   (3) CG 00 35 10 01; or
   (4) CG 00 35 12 04; or
   (5) CG 00 35 12 07; or
   (6) CG 00 35 04 13.

c. The named insured shall read:

   (As named in the Project Agreement with Project Sponsor)
   Three Commercial Place
   Norfolk, Virginia 23510-2191
   Attn: S. W. Dickerson Risk Management

   (NOTE: Railroad does not share coverage on RRPL with any other entity on this policy)

d. The description of operations must appear on the Declarations, must match the project description in this agreement, and must include the appropriate Sponsor project and contract identification numbers.

e. The job location must appear on the Declarations and must include the city, state, and appropriate highway name/number. **NOTE: Do not include any references to milepost, valuation station, or mile marker on the insurance policy.**

f. The name and address of the prime Contractor must appear on the Declarations.

g. The name and address of the Sponsor must be identified on the Declarations as the "Involved Governmental Authority or Other Contracting Party."

h. Other endorsements/forms that will be accepted are:

   (1) Broad Form Nuclear Exclusion – Form IL 00 21
   (2) 30-day Advance Notice of Non-renewal or cancellation
   (3) Required State Cancellation Endorsement
   (4) Quick Reference or Index Form CL/IL 240

i. Endorsements/forms that are NOT acceptable are:

(1) Any Pollution Exclusion Endorsement except CG 28 31
(2) Any Punitive or Exemplary Damages Exclusion
(3) Known injury or Damage Exclusion form CG 00 59
(4) Any Common Policy Conditions form
(5) Any other endorsement/form not specifically authorized in item no. 2.h above.

B. If any part of the work is sublet, similar insurance, and evidence thereof as specified in A.1 above, shall be provided by or on behalf of the subcontractor to cover its operations on Railroad's right of way.

C. All insurance required under the preceding subsection A shall be underwritten by insurers and be of such form and content, as may be acceptable to the Company. Prior to entry on Railroad right-of-way, the original Railroad Protective Liability Insurance Policy shall be submitted by the Prime Contractor to the Sponsor at the address below for its review and transmittal to the Railroad. In addition, certificates of insurance evidencing the Prime Contractor's and any subcontractors' Commercial General Liability Insurance shall be issued to the Railroad and the Sponsor at the addresses below, and forwarded to the Department for its review and transmittal to the Railroad. The certificates of insurance shall state that the insurance coverage will not be suspended, voided, canceled, or reduced in coverage or limits without (30) days advance written notice to Railroad and the Sponsor. No work will be permitted by Railroad on its right-of-way until it has reviewed and approved the evidence of insurance required herein.

SPONSOR:

RAILROAD:
Risk Management
Norfolk Southern Railway Company
Three Commercial Place
Norfolk, Virginia 23510-2191

D. The insurance required herein shall in no way serve to limit the liability of Sponsor or its Contractors under the terms of this agreement.

E. Insurance Submission Procedures

1. Railroad will only accept initial insurance submissions via US Mail or Overnight carrier to the address noted in C above. Railroad will NOT accept initial insurance submissions via email or faxes. **Please provide point of contact information with the submission including a phone number and email address.**

2. Railroad requires the following two (2) forms of insurance in the initial insurance submission to be submitted under a cover letter providing details of the project and contact information:

a. The full original or certified true countersigned copy of the railroad protective liability insurance policy in its entirely inclusive of all declarations, schedule of forms and endorsements along with the policy forms and endorsements.

b. The Contractor's commercial general, automobile, and workers' compensation liability insurance certificate of liability insurance

evidencing a combined single limit of a minimum of $2M per occurrence of general and $1M per occurrence of automobile liability insurance naming Norfolk Southern Railway Company, Three Commercial Place, Norfolk, VA 23510 as the certificate holder and as an additional insured on both the general and automobile liability insurance policy.

3. It should be noted that the Railroad does not accept notation of Railroad Protective insurance on a certificate of liability insurance form or Binders as Railroad must have the full original countersigned policy. Further, please note that mere receipt of the policy is not the only issue but review for compliance. Due to the number of projects system-wide, it typically takes a minimum of 30-45 days for the Railroad to review.

15. FAILURE TO COMPLY:

A. In the event the Contractor violates or fails to comply with any of the requirements of these Special Provisions:

1. The Railroad Engineer may require that the Contractor vacate Railroad property.

2. The Sponsor's Engineer may withhold all monies due the Contractor on monthly statements.

B. Any such orders shall remain in effect until the Contractor has remedied the situation to the satisfaction of the Railroad Engineer and the Sponsor's Engineer.

16. PAYMENT FOR COST OF COMPLIANCE:

A. No separate payment will be made for any extra cost incurred on account of compliance with these special provisions. All such costs shall be included in prices bid for other items of the work as specified in the payment items.

17. PROJECT INFORMATION

A. Date: _____
B. NS File No.: _____
C. NS Milepost: _____
D. Sponsor's Project No.: _____

F. Norfolk Southern Typical Agreements

DISCLAIMER: The Agreement Templates listed below are for reference only and are subject to change at any time. The Sponsor and/or their Designer shall contact the appropriate Norfolk Southern Public Projects Engineer for the current agreement version.

F.1 Preliminary Engineering Agreement
F.2 Project Agreement
F.3 Beautification Agreement
F.4 Right of Entry Agreement
F.5 Contractor Right of Entry Agreement

F.1 - Preliminary Engineering Agreement

The Following page is an example of a typical Preliminary Engineering Agreement drafted by Norfolk Southern. This agreement will be used when the Project Sponsor does not have a standard agreement format approved by Norfolk Southern.

AGREEMENT FOR PRELIMINARY ENGINEERING SERVICES

This agreement made by and between the_____

(hereinafter called "_____"), and Norfolk Southern Railway Company (hereinafter called "COMPANY").

The _____ will submit plans and specifications to said COMPANY for work which will involve or affect COMPANY facilities at the following location:

Town, County State: _____
AAR-DOT#: _____
Street /Bridge Name: _____
Description: _____

Preliminary Engineering Cost Estimate: _____

Therefore, in consideration of the benefits moving to each of the parties hereto, they do mutually agree as follows:

ARTICLE 1. REIMBURSEMENT. The _____ agrees to reimburse the COMPANY for actual cost of preliminary engineering necessary in connection with the project.

The COMPANY shall submit to the _____ fair and reasonable costs of the aforesaid work performed as evidenced by detailed invoices acceptable to the _____. The_____ shall reimburse the COMPANY in the amount of the approved costs so submitted.

ARTICLE 2. EFFECTIVE DATE OF AGREEMENT. This agreement shall take effect at the time it is approved and signed by both the _____ and the COMPANY.

ARTICLE 3. STARTING OF WORK. This agreement covers preliminary engineering services performed starting (date). The COMPANY agrees to provide preliminary engineering services at the request of _____ or its agent, whether written or verbal.

IN WITNESS WHEREOF, the _____ and the COMPANY have caused these presents to be signed by their duly authorized officers:

_____
Signature:_____
Name:_____
Title:_____
Date:_____

COMPANY
Signature:_____
Name:_____
Title:_____
Date:_____

F.2 – Project Agreement

The following pages are an example of a typical Construction Agreement drafted by Norfolk Southern. This agreement will be used when the Project Sponsor does not have a standard agreement format approved by Norfolk Southern. Please note that this agreement will be modified based on the project conditions and is provided for reference only.

THIS AGREEMENT, dated as of the ____ day of _____, 201_ is made and entered into by and between

NORFOLK SOUTHERN RAILWAY COMPANY, a Virginia corporation, whose mailing address is Three Commercial Place, Norfolk, Virginia 23510 (hereinafter called "RAILWAY"); and

_____, an _____, whose mailing address is _____ (hereinafter called "LICENSEE").

RECITALS

WHEREAS, LICENSEE, at its own cost and expense, has found it necessary _____ (the "Facilities"), in the vicinity of RAILWAY Milepost _____, at or near _____ (the "Premises"), located substantially as shown upon print of Drawing marked Exhibit A; and

WHEREAS, RAILWAY is willing to permit LICENSEE to enter upon RAILWAY's right of way for installation, construction, maintenance, operation and removal of the Facilities upon the terms and conditions of this Agreement; and in accordance with the plans and specifications marked Exhibit B; and

WHEREAS, RAILWAY is willing, at LICENSEE's sole expense, to make modifications to RAILWAY's right of way and/or appurtenances rendered necessary by LICENSEE's installation, construction, maintenance, operation and removal of its Facilities in accordance with the force account estimate marked Exhibit D.

NOW THEREFORE, for and in consideration of the premises and mutual covenants contained in this Agreement, the parties agree as follows:

I. LICENSEE'S FACILITIES

1. Right-of-Entry. RAILWAY, insofar as its rights and title enables it to do so and subject to its rights to operate and maintain its RAILWAY and RAILWAY appurtenances along, in, and over its right-of-way, grants LICENSEE, its agents and/or contractors, without compensation, the right to enter upon the Premises, for the purpose of installation, construction, maintenance, operation and removal of the Facilities, provided that, prior to entry upon lands of RAILWAY, any agent and/or contractor of LICENSEE must execute and deliver to RAILWAY a standard contractor right-of-entry agreement in a form approved by RAILWAY in its sole discretion, together with any certificate(s) of insurance required therein. Furthermore, any crossing of RAILWAY tracks by LICENSEE or any of its agents and/or contractors must be addressed by a standard temporary crossing agreement in a form approved by RAILWAY in its sole discretion.

2. Use and Condition of the Premises. The Premises shall be used by LICENSEE only for the installation, construction, maintenance, operation and removal of the Facilities and for no other purpose without the prior written consent of RAILWAY, which consent may be withheld by RAILWAY in its sole discretion. LICENSEE accepts the Premises in their current "as is" condition, as suited for the installation and operation of the Facilities, and without the benefit of any improvements to be constructed by RAILWAY except insofar as contemplated by Section II of this Agreement.

3. Construction and Maintenance of the Facilities. LICENSEE shall construct and maintain the Facilities, at its expense, in such a manner as will not interfere with the operations of RAILWAY or endanger persons or property of RAILWAY, and in accordance with (a) plans and specifications (if any) shown on said print(s) marked as Exhibit B and any other specifications prescribed by RAILWAY, (b) applicable governmental regulations or laws, and (c) applicable specifications adopted by the American RAILWAY Engineering and

Maintenance of Way Association when not in conflict with plans, specifications or regulations mentioned in (a) and (b) above. LICENSEE and any and all of LICENSEE contractors entering the Premises shall fully comply with applicable roadway worker protection regulations.

4. Indemnification. LICENSEE hereby agrees to indemnify and save harmless RAILWAY, its officers, agents and employees, from and against any and all liability, claims, losses, damages, expenses (including attorneys' fees) or costs for personal injuries (including death) and/or property damage to whomsoever or whatsoever occurring which arises in any manner from LICENSEE's negligence associated with the installation, maintenance, operation, presence or removal or the failure to properly install, maintain, operate or remove the Facilities, unless such losses, damages or injuries shall be caused solely by the negligence of RAILWAY.

5. Environmental Matters. LICENSEE assumes all responsibility for any environmental obligations imposed under applicable laws, regulations or ordinances relating to the installation of the Facilities and/or to any contamination of any property, water, air or groundwater arising or resulting from LICENSEE's permitted operations or uses of RAILWAY's property pursuant to this Agreement. In addition, LICENSEE shall obtain any necessary permits to install the Facilities. LICENSEE agrees to indemnify and hold harmless RAILWAY from and against any and all liability, fines, penalties, claims, demands, costs (including attorneys' fees), losses or lawsuits brought by any person, company or governmental entity relating to contamination of any property, water, air or groundwater due to the use or presence of the Facilities. It is agreed that this indemnity provision extends to any cleanup costs related to LICENSEE's activities upon RAILWAY's property and to any costs related to cleanup of the Facilities or to other property caused by the use of the Facilities.

6. Insurance.

(a) Without limiting in any manner the liabilities and obligations assumed by LICENSEE under any other provision of this Agreement, and as additional protection to RAILWAY, LICENSEE shall, at its expense, procure and maintain with insurance companies satisfactory to RAILWAY, the following insurance policies:

(i) A Commercial General Liability Insurance Policy having a combined single limit of not less than $2,000,000 per occurrence for all loss, damage, cost and expense, including attorneys' fees, arising out of bodily injury liability and property damage liability during the policy period. Said policy shall include explosion, collapse, and underground hazard (XCU) coverage, shall be endorsed to name RAILWAY as the certificate holder and as an additional insured, and shall include a severability of interests provision; and,

(ii) An original Railroad Protective Liability Insurance Policy naming RAILWAY as a named insured and having a combined single limit of not less than $2,000,000 each occurrence and $6,000,000 in the aggregate applying separately to each annual period. If the project involves track over which passenger trains operate, the insurance limits required are not less than a combined single limit of $5,000,000 each occurrence and $10,000,000 in the aggregate applying separately to each annual period.

(b) All insurance required under the preceding subsection (a) shall be underwritten by insurers and be of such form and content, as may be acceptable to RAILWAY. Prior to the commencement of installation or maintenance of the Facilities or any entry on RAILWAY's property, LICENSEE shall furnish to RAILWAY's Director Risk Management, Three Commercial Place, Norfolk, Virginia 23510-2191 (or such other representative and/or address as subsequently given by RAILWAY to LICENSEE in writing), for approval, the original policy described in subsection (a)(ii) and a certificate of insurance evidencing the existence of a policy with the coverage described in subsection (a)(i).

7. Railway Support. RAILWAY shall, at RAILWAY's option, furnish, at the sole expense of LICENSEE, labor and materials necessary, in RAILWAY's sole judgment, to support its tracks and to protect its traffic (including, without limitation, flagging) during the installation, maintenance, repair, renewal or removal of the Facilities.

8. Special Provisions for Protection of Railway Interests. In connection with the operation and maintenance of the Facilities, it is agreed that the safety of people and the safety and continuity of RAILWAY's rail operations shall be of first importance. LICENSEE shall require its employees, agents, contractors, and invitees to utilize and comply with RAILWAY's directives in this regard and shall require its contractor(s), if any, to comply with all NSR Special Provisions, attached hereto, and herein incorporated by reference, including any future amendments, as Exhibit C. As used in the NSR Special Provisions, LICENSEE is the "contractor" should LICENSEE enter onto the Premises to perform any work contemplated by this Agreement. To ensure such compliance, LICENSEE shall assign a project manager to function as a single point-of-contact for LICENSEE. Said project manager is referred to as the "Sponsor's Engineer" in Exhibit C.

9. Safety of Railway Operations. If RAILWAY becomes aware of any safety violations committed by LICENSEE, its employees, agents and/or contractors, RAILWAY shall so notify LICENSEE, and LICENSEE shall promptly correct such violation. In the event of an emergency threatening immediate danger to persons or property, RAILWAY may take corrective actions and shall notify LICENSEE promptly thereafter. LICENSEE shall reimburse RAILWAY for actual costs incurred in taking such emergency measures. RAILWAY assumes no additional responsibility for safety on the Premises for LICENSEE, its agents/or contractors by taking these corrective actions, and LICENSEE, its agents/contractors shall retain full responsibility for such safety violations.

10. Corrective Measures. If LICENSEE fails to take any corrective measures requested by RAILWAY in a timely manner, or if an emergency situation is presented which, in RAILWAY's judgment, requires immediate repairs to the Facilities, RAILWAY, at LICENSEE's expense, may undertake such corrective measures or repairs as it deems necessary or desirable.

11. Railway Changes. If RAILWAY shall make any changes, alterations or additions to the line, grade, tracks, structures, roadbed, installations, right-of-way or works of RAILWAY, or to the character, height or alignment of the Electronic Systems, at or near the Facilities, LICENSEE shall, upon thirty (30) days prior written notice from RAILWAY and at its sole expense, make such changes in the location and character of the Facilities as, in the opinion of the chief engineering officer of RAILWAY, shall be necessary or appropriate to accommodate any construction, improvements, alterations, changes or additions of RAILWAY.

12. Assumption of Risk. Unless caused solely by the negligence of RAILWAY or caused solely by the willful misconduct of RAILWAY, LICENSEE hereby assumes all risk of damage to the Facilities and LICENSEE's other property relating to its use and occupation of the Premises or business carried on the Premises and any defects to the Premises; and LICENSEE hereby declares and states that RAILWAY, its officers, directors, agents and employees shall not be responsible for any liability for such damage.

13. Liens; Taxes. LICENSEE will not permit any mechanic's liens or other liens to be placed upon the Premises, and nothing in this Agreement shall be construed as constituting the consent or request of RAILWAY, express or implied, to any person for the performance of any labor or the furnishing of any materials to the Premises, nor as giving LICENSEE any right, power or authority to contract for or permit the rendering of any services or the furnishing of any materials that could give rise to any mechanic's liens or other liens against the Premises. In addition, LICENSEE shall be liable for all taxes levied or assessed against the Facilities and any other equipment or other property placed by LICENSEE within the Premises. In the event that any such lien shall attach to the Premises or LICENSEE shall fail to pay such taxes, then, in addition to any other right or remedy available to RAILWAY, RAILWAY may, but shall not be obligated to, discharge the same. Any amount paid by RAILWAY for any of the aforesaid purposes, together with related court costs, attorneys' fees, fines and penalties, shall be paid by LICENSEE to RAILWAY within ten (10) days after RAILWAY's demand therefor.

14. Default; Remedies.

(a) The following events shall be deemed to be events of default by LICENSEE under this Agreement:

(i) LICENSEE shall fail to pay any sum of money due hereunder and such failure shall continue for a period of ten (10) days after the due date thereof;

(ii) LICENSEE shall fail to comply with any provision of this Agreement not requiring the payment of money, all of which terms, provisions and covenants shall be deemed material, and such failure shall continue for a period of thirty (30) days after written notice of such default is delivered to LICENSEE;

(iii) LICENSEE shall become insolvent or unable to pay its debts as they become due, or LICENSEE notifies RAILWAY that it anticipates either condition;

(iv) LICENSEE takes any action to, or notifies RAILWAY that LICENSEE intends to file a petition under any section or chapter of the United States Bankruptcy Code, as amended from time to time, or under any similar law or statute of the United States or any State thereof; or a petition shall be filed against LICENSEE under any such statute; or

(v) a receiver or trustee shall be appointed for LICENSEE's license interest hereunder or for all or a substantial part of the assets of LICENSEE, and such receiver or trustee is not dismissed within sixty (60) days of the appointment.

(b) Upon the occurrence of any event or events of default by LICENSEE, whether enumerated in this paragraph 15 or not, RAILWAY shall have the option to pursue any remedies available to it at law or in equity without any additional notices to LICENSEE. RAILWAY's remedies shall include, but not be limited to, the following: (i) termination of this Agreement, in which event LICENSEE shall immediately surrender the Premises to RAILWAY; (ii) entry into or upon the Premises to do whatever LICENSEE is obligated to do under the terms of this License, in which event LICENSEE shall reimburse RAILWAY on demand for any expenses which RAILWAY may incur in effecting compliance with LICENSEE's obligations under this License, but without rendering RAILWAY liable for any damages resulting to LICENSEE or the Facilities from such action; and (iii) pursuit of all other remedies available to RAILWAY at law or in equity, including, without limitation, injunctive relief of all varieties.

15. Railway Termination Right. Notwithstanding anything to the contrary in this Agreement, RAILWAY shall have the right to terminate this Agreement and the rights granted hereunder, after delivering to LICENSEE written notice of such termination no less than sixty (60) days prior to the effective date thereof, upon the occurrence of any one or more of the following events:

(a) If LICENSEE shall discontinue the use or operations of the Facilities; or

(b) If RAILWAY shall be required by any governmental authority having jurisdiction over the Premises to remove, relocate, reconstruct or discontinue operation of its railroad on or about the Premises; or

(c) If RAILWAY, in the good faith judgment of its Superintendent, shall require a change in the location or elevation of its railroad on or about the location of the Facilities or the Premises that might effectively prohibit the use or operation of the Facilities; or

(d) If RAILWAY, in the good faith judgment of its Superintendent, determines that the maintenance or use of the Facilities unduly interferes with the operation and maintenance of the facilities of

RAILWAY, or with the present or future use of such property by RAILWAY, its lessees, affiliates, successors or assigns, for their respective purposes.

16. Condemnation. If the Premises or any portion thereof shall be taken or condemned in whole or in part for public purposes, or sold in lieu of condemnation, then this Agreement and the rights granted to LICENSEE hereunder shall, at the sole option of RAILWAY, forthwith cease and terminate. All compensation awarded for any taking (or sale proceeds in lieu thereof) shall be the property of RAILWAY, and LICENSEE shall have no claim thereto, the same being hereby expressly waived by LICENSEE.

17. Removal of Facilities; Survival. The Facilities are and shall remain the personal property of LICENSEE. Upon the termination of this Agreement, LICENSEE shall remove the Facilities from the Premises within thirty (30) days after the effective date thereof. In performing such removal, unless otherwise directed by RAILWAY, LICENSEE shall restore the Premises to the same condition as existed prior to the installation or placement of Facilities, reasonable wear and tear excepted. In the event LICENSEE shall fail to so remove the Facilities or restore the Premises, the Facilities shall be deemed to have been abandoned by LICENSEE, and the same shall become the property of RAILWAY for RAILWAY to use, remove, destroy or otherwise dispose of at its discretion and without responsibility for accounting to LICENSEE therefor; provided, however, in the event RAILWAY elects to remove the Facilities, RAILWAY, in addition to any other legal remedy it may have, shall have the right to recover from LICENSEE all costs incurred in connection with such removal and the restoration of the Premises. Notwithstanding anything to the contrary contained in this Agreement, the termination of this Agreement shall not relieve LICENSEE from LICENSEE's obligations accruing prior to the termination date, and such obligations shall survive any such termination of this Agreement.

18. Interests in Real Property

LICENSEE shall acquire or settle all property, property rights and all damages to property affected by the installation, construction, maintenance, and operation of the Facilities. The cost of said property, property rights and damages to property shall be borne by LICENSEE.

RAILWAY, insofar as it has the legal right so to do, shall permit LICENSEE to enter upon lands owned or operated by RAILWAY to construct and occupy its property with sufficient width to permit construction and maintenance of the Facilities. LICENSE and RAILWAY shall enter into good faith negotiations for a price to be consistent with the property interest determined by LICENSEE to be needed for the proposed improvement.

However, the price to be paid by LICENSEE to RAILWAY for said conveyances (representing the fair market value thereof plus damages, if any, to the residue) shall be as mutually agreed upon within nine (9) months from the date of occupancy by LICENSEE, and if agreement as to price is reached, an additional period of ninety (90) days shall be allowed for settlement, it being agreed however, that if no agreement as to price is reached within the aforesaid nine (9) month period, LICENSEE will within ninety (90) days thereafter institute an eminent domain proceeding authorized by law for the determination of the value of same. The provisions of this Agreement shall survive the institution of such eminent domain proceeding.

LICENSEE shall furnish the plans and descriptions for any such conveyance. It is understood, however, that the foregoing right of entry is a permissive use only, and this Section is not intended to convey or obligate RAILWAY to convey any interest in its land.

II. SCOPE OF RAILROAD PROJECT, AND MAINTENANCE AND OWNERSHIP OF PROJECT IMPROVEMENTS

1. Scope of Work. The scope of the work by RAILWAY shall include any necessary acquisition of right-of-way, permitting, design, construction, and construction-related activities including, but not limited to, inspection, flagging, and superintendence, within and along RAILWAY property necessary to facilitate LICENSEE's installation, construction, maintenance, operation and removal of the Facilities ("Railroad Project").

2. Construction of the Railroad Project. The RAILWAY shall construct the Railroad Project in accordance with the force account estimate, attached as Exhibit D and herein incorporated by reference, including any future amendments thereto, and all applicable state and federal laws.

(a) All work performed by the RAILWAY related to the Railroad Project and consistent with the force account estimate will be deemed reimbursable project expenses, and shall be at no cost to the RAILWAY.

(b) RAILWAY shall accomplish work on the Railroad Project by the following: (i) railroad force account; (ii) existing continuing contracts at reasonable costs; (iii) contracting with the lowest responsible bidder based on appropriate solicitation; or (iv) contract without competitive bidding for minor work at reasonable costs.

3. Maintenance and Ownership of the Railroad Project. Upon completion of the Railroad Project, the RAILWAY shall own and, at its own cost and expense, maintain the Railroad Project improvements until such time as RAILWAY deems such maintenance to no longer be necessary.

4. Construction of the Railroad Project. Execution of this Agreement constitutes LICENSEE's issuance of a notice to proceed to RAILWAY with the Railroad Project ("Notice to Proceed"). RAILWAY shall make commercially reasonable efforts to commence construction on the Railroad Project as soon as possible, in RAILWAY's sole discretion, after the date of availability for RAILWAY to commence its construction activities on the Railroad Project.

5. Reimbursement by LICENSEE.

(a) RAILWAY shall furnish, or cause to be furnished, at the expense of the LICENSEE all the labor costs, overhead and indirect construction costs, materials and supplies, contracted services, transportation, equipment, and other related costs and items required to perform and complete the Railroad Project. In addition, RAILWAY shall furnish, at the expense of LICENSEE, the protection of rail traffic occasioned by or made necessary by entry by LICENSEE and/or its contractors or any subcontractor(s) pursuant to this Agreement.

(b) Except as otherwise provided in this Agreement, LICENSEE shall reimburse the RAILWAY for the actual cost of the work performed by it, which is estimated to be _____Dollars and zero Cents ($_____.00). It is agreed that progress payments will be made by LICENSEE to the RAILWAY for the total amount of work done as shown on monthly statements. LICENSEE shall pay each RAILWAY statement within forty-five (45) days of receipt. Upon receipt of the final bill, RAILWAY shall be reimbursed in such amounts as are proper and eligible for final payment, and the RAILWAY Project shall be submitted to LICENSEE for final audit.

(c) Incurred Costs. The reimbursement amounts for all costs billed under this Agreement shall be subject to the applicable Federal principles and based on the full actual costs plus Approved Labor Additives. Design costs incurred by RAILWAY prior to issuance of the Notice to Proceed shall be reimbursed by LICENSEE.

III. GENERAL PROVISIONS

1. Assignment and Successors. This Agreement shall be binding upon and shall inure to the benefit of, and shall be enforceable by, the parties hereto and their respective permitted successors and assigns.

2. Limitations Upon Damages. Notwithstanding any other provision of this Agreement, RAILWAY shall not be liable for breach of this Agreement or under this Agreement for any consequential, incidental, exemplary, punitive, special, business damages or lost profits, as well as any claims for death, personal injury, and property loss and damage which occurs by reason of, or arises out of, or is incidental to the interruption in or usage of the Facilities placed upon or about the Premises by LICENSEE, including without limitation any damages under such claims that might be considered consequential, incidental, exemplary, punitive, special, business damages or loss profits.

3. Miscellaneous. All exhibits, attachments, riders and addenda referred to in this Agreement are incorporated into this Agreement and made a part hereof for all intents and purposes. Time is of the essence with regard to each provision of this Agreement. This Agreement shall be construed and interpreted in accordance with and governed by the laws of the State in which the Premises are located. Each covenant of RAILWAY and LICENSEE under this Agreement is independent of each other covenant under this Agreement. No default in performance of any covenant by a party shall excuse the other party from the performance of any other covenant.

4. Notice to Parties. Whenever any notice, statement or other communication is required under this Agreement, it shall be sent to the contact below except as otherwise provided in this Agreement or unless otherwise specifically advised.

As to LICENSEE:
_____
_____
_____
_____

As to RAILWAY:
c/o Norfolk Southern Corporation
1200 Peachtree Street, N.E.
Atlanta, Georgia 30309-3504
Attention: Public Projects Engineer

Either party may, by notice in writing, direct that future notices or demands be sent to a different address. All notices hereunder shall be deemed given upon receipt (or, if rejected, upon rejection).

5. Severability. The invalidity of any section, subsection, clause or provision of this Agreement shall not affect the validity of the remaining sections, subsections, clauses or provisions of this contract.

6. No Third Party Beneficiary. This Agreement shall be for the benefit of the parties only, and no person, firm or corporation shall acquire any rights whatsoever by virtue of this Agreement, except LICENSEE and the RAILWAY and their successors and assigns.

7. Force Majeure. The parties agree to pursue the completion of the Railroad Project in accordance with the requirements of this Agreement. No party shall be held responsible to the other for delays caused by Force Majeure events, and such delays shall not be deemed a breach or default under this Agreement. In no event shall Force Majeure events excuse LICENSEE from its obligation to make payment to RAILWAY in accordance with this Agreement. Further the parties agree that the resolution or settlement of strikes or other labor disputes shall not be deemed to be within the control or reasonable control of the affected party. If any party is unable to complete work assigned to it due to a condition of Force Majeure or other conditions beyond the reasonable control of said party, then said party will diligently pursue completion of the item that is delayed once said condition or conditions

are no longer in effect. For purposes of this Agreement, Force Majeure events are defined as circumstances beyond a party's reasonable control that delay performance and may include, but are not limited to, acts of God, actions or decrees of governmental bodies (beyond control of the parties), acts of the public enemy, labor disputes, fires, insurrections, and floods.

8. Amendment; Entire Agreement. This Agreement may be amended only in writing executed by authorized representatives of the parties hereto. No verbal change, modification, or amendment shall be effective unless in writing and signed by authorized representatives of the parties. The provisions hereof constitute the entire Agreement between the parties and supersede any verbal statement, representations, or warranties, stated or implied.

9. Waiver of Workers Compensation Immunity. In the event that all or a portion of the Premises is location in the State of Ohio, LICENSEE, with respect to the indemnification provisions contained in this Agreement, hereby expressly waives any defense or immunity granted or afforded LICENSEE pursuant to Section 35, Article II of the Ohio Constitution and Section 4123.74 of the Ohio Revised Code. In the event that all or a portion of the Premises is located in the Commonwealth of Pennsylvania, LICENSEE, with respect to the indemnification provisions contained in this Agreement, hereby expressly waives any defense or immunity granted or afforded LICENSEE pursuant to Pennsylvania Workers' Compensation Act, 77 P.S. 481.

10. Independent Contractors. The parties agree that LICENSEE and its agents and/or contractors, shall not be deemed either agents or independent contractors of RAILWAY. Except as otherwise provided by this Agreement, RAILWAY shall exercise no control whatsoever over the employment, discharge, compensation of, or services rendered by LICENSEE or its contractors. Notwithstanding the foregoing, this paragraph shall in no way affect the absolute authority of RAILWAY to temporarily prohibit LICENSEE, its agents and/or contractors, or persons not associated with LICENSEE from entering RAILWAY property, or to require the removal of any person from RAILWAY property, if RAILWAY determines, in its sole discretion, that such person is not acting in a safe manner or that actual or potential hazards in, on, or about the Railroad Project Work exist.

11. Meaning of "Railway". The word "RAILWAY" as used herein shall include any other company whose property at the aforesaid location may be leased or operated by RAILWAY. Said term also shall include RAILWAY's officers, directors, agents and employees, and any parent company, subsidiary or affiliate of RAILWAY and their respective officers, directors, agents and employees.

12. Approval of Plans. By its review and approval, if any, of the plans marked as Exhibit B, RAILWAY signifies only that the plans and improvements to be constructed in accordance with the plans satisfy the RAILWAY's requirements. RAILWAY expressly disclaims all other representations and warranties in connection with said plans, including, but not limited to, the integrity, suitability or fitness for the purposes of the LICENSEE or any other person(s) of the plans or improvements constructed in accordance with the plans.

IN WITNESS WHEROF, the parties have, through duly authorized representatives, entered into this Agreement effective the day and year first written above.

_____	**NORFOLK SOUTHERN RAILWAY COMPANY,** a Virginia corporation
_____\	
By: _____	By: _____
Name: _____	Name: _____
Title: _____	Title: _____
Date: _____	Date: _____ ___

F.3 - Beautification Agreement

The following pages are an example of a typical Beautification Agreement drafted by Norfolk Southern. This agreement will be used when the Project Sponsor does not have a standard agreement format approved by Norfolk Southern. Please note that this agreement will be modified based on the project conditions.

UNDERPASS PAINTING AGREEMENT

THIS AGREEMENT, made and entered into by and between

NORFOLK SOUTHERN RAILWAY COMPANY, a Virginia corporation, hereinafter styled "Railway"; and

_____, an _____ entity, hereinafter styled "_____":

W I T N E S S E T H:

WHEREAS, Railway owns existing underpass bridge structures (hereinafter "Bridge") located over _____-maintained public road designated as _____, located at Dearborn Division Milepost _____ (DOT# _____) in _____, _____ County, _____, and

WHEREAS, in connection with _____'s beautification plans, _____ requests permission to clean, paint and thereafter to maintain the painting on the concrete abutments and steel fascia beams of the Bridge; and

NOW, THEREFORE, for and in consideration of the covenants hereinafter made, Railway does hereby grants permission to _____ to clean and paint the _____, (hereinafter "Painting") upon the following terms and conditions:

1. _____ will install and maintain the Painting, at its expense, at the location shown on prints of Drawings, attached hereto as Exhibit A and made a part hereof; said Painting to be installed in such manner as will not interfere with operations of Railway or endanger persons or property of Railway, and in accordance with (a) plans and specifications (if any) shown on said prints and any other specifications prescribed by Railway, and (b) applicable regulations prescribed by statute or by governmental authority.

2. To the extent permitted by the laws of _____, _____ hereby agrees to indemnify and save harmless Railway, its officers, agents and employees, from and against any and all liability, claims, loss, damage, expense (including attorney's fees) or costs for personal injuries (including death) and/or property damage to whomsoever or whatsoever, occurring or arising in any manner from the installation, maintenance, operation, presence or removal or failure to properly install, maintain, operate or remove the Painting, unless such loss, damage or injury shall be caused solely by the negligence of Railway. However, _____ does not waive any immunities, rights, limitations of liability, exemptions or protections granted to it and its employees by federal law or the laws of the State of Indiana. _____ will require any contractors engaged to perform any of the work under this agreement to agree to indemnify and save harmless Railway and _____, their officers, agents and employees, from and against any and all liability, claims, loss, damage, expense (including attorney's fees) or costs for personal injuries (including death) and/or property damage to whomsoever or whatsoever, occurring or arising in any manner from the installation, maintenance, operation, presence or removal or failure to properly install, maintain, operate or remove the Painting, unless such loss, damage or injury shall be caused solely by the negligence of Railway.

3. The details of the Painting, including any systems associated with the application or attachment of the Painting, are to be at the option of _____, subject to the approval of the chief engineering officer of Railway, and in case of failure of _____ to do the work as herein specified, Railway reserves the right to remove the Painting from Railway's premises at the expense of _____, and to terminate this Agreement upon thirty (30) days' written notice to _____.

4. All work performed under this Agreement shall be in accordance with the: (a) "Special Provisions for Protection of Railway Interests" attached hereto as Exhibit C and made a part hereof, and (b) "Norfolk Southern Railway Specifications for Field Painting of Bridges" attached hereto as Exhibit B and made a part hereof.

5. It is further agreed that, in connection with any future alterations in or additions to the line, grade, tracks or works of Railway, _____ will bear the entire expense of such changes in the location and character of the Painting as, in the opinion of the chief engineering officer of Railway, shall be necessary or appropriate on account of said alterations or additions.

6. If the Painting endangers operations of the Railway or endangers the personnel of Railway or anyone else entitled to be on Railway's property, _____, at the request of Railway, and at _____'s expense, will modify the Painting to the satisfaction of Railway so as to eliminate such danger.

7. If _____ fails to take any corrective measures requested by Railway in a timely manner or if an emergency situation is presented which in the Railway's judgment requires immediate repairs to the Painting, Railway may undertake such corrective measures, or removal of painting, as it deems necessary or desirable, at _____'s expense.

8. Notwithstanding any other provision of this Agreement, it is mutually understood, agreed and covenanted that _____ accepts this Agreement as a mere license and assumes all risk of damage to its property by reason of its occupation of the premises herein described, caused by any defects therein or business carried on therein, if such loss, damage or injury is caused by the negligence of _____, its officers, agents or employees.

9. Railway shall furnish, at the cost of _____, labor and materials to protect its traffic during the installation, maintenance, repair, renewal or removal of the Painting.

10. It is further agreed between the parties hereto that _____ will install the Painting solely from the streets below, and for no purpose will enter onto the railroad right of way without the specific written permission of the chief engineering officer of Railway.

11. _____ shall give Railway seventy two (72) hours' advance notice (or less in case of emergencies) of any work to be performed. _____ agrees to pay any costs incurred by Railway for the purpose of protection and inspection considered necessary by Railway during construction, maintenance, operation, modification, replacement and/or removal of the Painting.

12. _____ shall not assign this Agreement without the written consent of Railway.

13. The word "Railway" as used herein shall include any other company whose property at the aforesaid location may be leased or operated by Railway. Said term also shall include Railway's officers, agents and employees, and any parent company, subsidiary or affiliate of Railway and their officers, agents and employees.

14. This Agreement may be terminated by either party hereto upon sixty (60) days' written notice to the other party. During said sixty-day period, _____ shall remove the Painting from Railway's premises and restore said premises to a condition satisfactory to Railway's chief engineering officer. If _____ fails to remove the Painting within the aforesaid sixty day period, Railway shall elect: (a) to become the owner of the Painting without any claim or consideration whatsoever therefor by or to _____, its successors or assigns, or (b) to remove the Painting and all property of _____ from the premises of Railway at the expense of _____. _____ agrees to reimburse Railway for any and all costs of such removal. No termination of this Agreement shall affect any liability incurred by either party hereto prior to the effective date of such termination.

15. This Agreement shall take effect as of the day of , 2012.

IN WITNESS WHEREOF, the parties hereto have executed this Agreement in duplicate, each part being an original, as of the day of , 2012.

NORFOLK SOUTHERN RAILWAY COMPANY

Witness: By:

_____ _____

As to Railway Title:

_____

Witness: By:

_____ _____

As to _____ Title:

F.4 - Right of Entry Agreements

Right of Entry Agreements are handled by NS' Real Estate Department. Information regarding right of entry agreements can be found online at:

http://realestate.nscorp.com/nscrealestate/RealEstate/ROE_crossings/Right_of_Entry/

An application is required for all right of entry agreements. The application and its instructions can be found online at:

http://realestate.nscorp.com/nscrealestate/realestate/pdf/right_of_entry.pdf

F.5 – Contractor Right of Entry Agreement

The following pages are an example of a typical Contractor Right of Entry Agreement drafted by Norfolk Southern. This agreement is required to be signed by any contractor that will be performing work that has the potential to impact Norfolk Southern's right of way. This agreement will be utilized in conjunction with all Project Agreements with the Project Sponsor. Please note that this agreement will be modified based on the project conditions and is provided for reference only.

NORFOLK SOUTHERN
CONTRACTOR RIGHT OF ENTRY AGREEMENT

WHEREAS, _____ ("Principal") has requested that Norfolk Southern Railway Company ("Company") permit Principal to be on or about Company's premises and/or facilities at or in the vicinity of _____ (the "Premises") for the sole purpose of _____ , on behalf of _____ (the "Project Sponsor") during the period _____, 20____, to _____, 20____ (the "Right of Entry").

WHEREAS, Company is willing to grant the Right of Entry subject to the terms and conditions set forth herein.

NOW THEREFORE, in consideration of the foregoing and other good and valuable consideration, the receipt and sufficiency of which is hereby acknowledged, and intending to be legally bound hereby, the parties hereby agree as follows.

Company hereby grants Principal the Right of Entry. The Right of Entry shall extend to Principal and to subcontractors and other entities affiliated with Principal who are specifically approved for entry by authorized representatives of Company in writing, as well as to the officers and employees of the foregoing (collectively "Licensees"). The Right of Entry shall apply to those portions of the Premises, and to such equipment, machinery, rolling stock and other personal property and fixtures belonging to Company or otherwise located on the Premises, only to the extent specifically designated and approved in writing by authorized representatives of Company (collectively, "Designated Property").

Principal agrees:

(i) that Licensees' access to the Premises shall be limited to the Designated Property and that Principal shall be liable and fully responsible for all actions of Licensees while on the Premises pursuant to the Right of Entry;

(ii) that Licensees shall (a) be subject to Company's direction when upon the Premises, and (b) be subject to Company's removal from the Premises, in Company's sole discretion, due to negligence, misconduct, unsafe actions, breach of this agreement or the failure to act respectfully, responsibly, professionally, and/or in a manner consistent with Company's desire to minimize risk and maintain its property with maximum security and minimum distractions or disruptions or for any other lawful reason;

(iii) that Licensees shall perform all work with such care, diligence and cooperation with Company personnel as to reasonably avoid accidents, damage or harm to persons or property and delays or interference with the operations of any Company's facilities and in accordance with Company's "Special Provisions for Protection of Railway Interest", attached and incorporated herein.

(iv) to give Company's officer signing this agreement, or his or her authorized representative, advance notification of the presence of Licensees on Designated Property in accordance with Company's "Special Provisions for Protection of Railway Interest";

(v) to indemnify and save harmless Company, its officers, agents and employees from and against any and all claims, demands, losses, suits, judgments, costs, expenses (including without limitation reasonable attorney's fees) and liability resulting from (a) injury to or death of any person, including without limitation the Licensees, and damage to or loss of any property, including without limitation that belonging to or in the custody of Licensees

(the "Licensee Property"), arising or in any manner growing out of the presence of either the Licensees or the Licensee Property, or both, on or about the Premises, regardless of whether negligence on the part of Company, its officers, agents or employees caused or contributed to said loss of life, personal injury or property loss or damage in whole or in part; (b) any alleged violation of any law, statute, code, ordinance or regulation of the United States or of any state, county or municipal government (including, without limitation, those relating to air, water, noise, solid waste and other forms of environmental protection, contamination or pollution or to discrimination on any basis) that results in whole or in part, directly or indirectly, from the activities of Licensees related in any way to their presence on the Premises or from any other act or omission of Licensees contributing to such violation, regardless of whether such activities, acts or omissions are intentional or negligent, and regardless of any specification by Company without actual knowledge that it might violate any such law, statute, code, ordinance or regulation; (c) any allegation that Company is an employer or joint employer of a Licensee or is liable for related employment benefits or tax withholdings; or (d) any decision by Company to bar or exclude a Licensee from the Premises pursuant to subsection (ii)(b) above;

(vi) to have and keep in effect the appropriate kinds of insurance as listed in the Company's "Special Provisions for Protection of Railway Interest, with insurance companies satisfactory to Company, during the entire time Licensees or Licensee Property, or both, is on the Premises: and to provide certificates of insurance showing the foregoing coverage, as well as any endorsements or other proper documentation showing and any change or cancellations in the coverage to the Company officer signing this agreement or to his or her authorized representative;

(vii) to reimburse Company for any costs not covered under the existing project agreement between the Company and the Project Sponsor, including any material, labor, supervisory and protective costs (including flagging) and related taxes and overhead expenses required or deemed necessary by Company because of the presence of either Licensees or Licensee Property on the Premises;

(viii) to exercise special care and precautions to protect the Premises and equipment, machinery, rolling stock and other personal property and fixtures belonging to Company or otherwise located on the Premises (whether or not constituting Designated Property) and to avoid interference with Company's operations;

(ix) to not create and not allow drainage conditions which would be adverse to the Premises or any surrounding areas;

(x) to refrain from the disposal or release of any trash, waste, and hazardous, dangerous or toxic waste, materials or substances on or adjacent to the Premises and to clean up or to pay Company for the cleanup of any such released trash, waste, materials or substances; and

(xi) to restore the Premises and surrounding areas to its original condition or to a condition satisfactory to the Company officer signing this agreement or to his or her authorized representative (ordinary wear and tear to rolling stock and equipment excepted) upon termination of Licensees' presence on the Premises.

As a part of the consideration hereof, Principal further hereby agrees that Company shall mean not only Norfolk Southern Railway Company but also Norfolk Southern Corporation and any and all subsidiaries and affiliates of Norfolk Southern Railway Company or Norfolk Southern Corporation, and that all of Principal's indemnity commitments in this agreement in favor of Company also shall extend to and indemnify Norfolk Southern Corporation and any subsidiaries and affiliated companies of Norfolk

Southern Railway Company or Norfolk Southern Corporation and its and/or their directors, officers, agents and employees.

It is expressly understood that the indemnification obligations set forth herein cover claims by Principal's employees, agents, independent contractors and other representatives, and Principal expressly waives any defense to or immunity from such indemnification obligations and/or any subrogation rights available under any applicable state constitutional provision, laws, rules or regulations, including, without limitation, the workers' compensation laws of any state. Specifically, (i) in the event that all or a portion of the Premises is located in the State of Ohio, the following provision shall be applicable: "Principal, with respect to the indemnification provisions contained herein, hereby expressly waives any defense or immunity granted or afforded it pursuant to Section 35, Article II of the Ohio Constitution and Section 4123.74 of the Ohio Revised Code"; and (ii) in the event that all or a portion of the Premises is located in the Commonwealth of Pennsylvania, the following provision shall be applicable: "Principal, with respect to the indemnification provisions contained herein, hereby expressly waives any defense or immunity granted or afforded it pursuant to the Pennsylvania Workers' Compensation Act, 77 P.S. 481".

This agreement shall be governed by the internal laws of the Commonwealth of Virginia, without regard to otherwise applicable principles of conflicts of laws. If any of the foregoing provisions is held for any reason to be unlawful or unenforceable, the parties intend that only the specific words found to be unlawful or unenforceable be severed and deleted from this agreement and that the balance of this agreement remain a binding enforceable agreement to the fullest extent permitted by law.

This agreement may be amended only in a writing signed by authorized representatives of the parties.

_____	NORFOLK SOUTHERN RAILWAY COMPANY
Name of Principal	
By_____	By_____
Title _____	Title _____
Date _____, 20____	Date _____, 20_____

G. Norfolk Southern Requirements for Easements and Right of Way

1. OVERVIEW

For all Public Projects, the Sponsor must consider right-of-way access requirements and property acquisition necessary for future construction. The NS Real Estate group reviews each project for potential impacts to the right-of-way and the respective facilities within the proposed project limits (ie. temporary & permanent easements, temporary crossings, temporary access roads, etc).

The NS Real Estate review is independent of the Public Project Engineer's review and will not proceed without NS Transportation approval and the Public Project Engineer's written approval of the project plans. Frequent communication with the NS Real Estate contacts throughout the Preliminary Engineering review will facilitate the handling process.

2. PURPOSE

The purpose of the NS Real Estate review is to ensure that the proposed impacts identified on NS property are truly required for the subject project and to ensure that NS is properly compensated for permanent and/or temporary use or acquisition of affected parcels and facilities.

3. PROCESS STEPS TO BE TAKEN

- For Public Improvement Projects, the Sponsor shall make initial contact to the Public Project Engineer advising the project scope and schedule, initiating Preliminary Engineering as indicated in Section 4.1.3.

- The Sponsor's Right-of-Way Specialist shall request (from the Public Project Engineer) the contact information for the NS Real Estate Manager and provide secondary notification of the project as well as anticipated property impacts.

- The NS Real Estate Manager will direct the Sponsor to the appropriate contacts at the local NS Division Office. The Sponsor and local NS Division Staff shall coordinate site meetings as necessary to discuss property impacts and confirm property boundaries.

- The Sponsor shall prepare right-of-way plans including a written Metes and Bounds describing each parcel impacted. All required right-of-way documents shall be submitted with a written offer for the respective property impacts. The submittals shall be directed to the respective State PUC (or equal), the NS Real Estate Manager, and the local NS Division staff with a copy to the Public Project Engineer.

- When the Project Sponsor and NS Real Estate have agreed to the proposed Metes & Bounds and completed the property negotiations, a formal project approval will be issued.

4. SUBMITTAL REQUIREMENTS

As the project progresses in preliminary engineering and the property impacts are refined, the Sponsor will be required to prepare and submit a Right-of-Way plan package for NS Real Estate review and approval in accordance with the Process Steps listed above.

The final package shall be comprehensive and at a minimum shall include the following documents:

- 11x17 Right-of-Way Plans, preferably color-coded (See included Sample Plan).

- Written Metes & Bounds describing the property boundaries and acreage for each affected parcel on NS right-of-way.

- Written offer for the proposed NS right-of-way impacts/acquisitions.

All documents shall be Date Stamped. No revisions or alterations shall be accepted without proper notification to all parties and a revised date stamp for the affected documents. The proper name for NS (Norfolk Southern Railway Company) shall be utilized on all Right-of-Way documents, unless the NS Real Estate Engineer or Manager indicates another NS subsidiary company hold title to an individual parcel of land.

During the review NS Real Estate will advise the need for additional documents or project information on a case by case basis.

5. NS REAL ESTATE ENGINEERING PLAT AND LEGAL DESCRIPTION REQUIREMENTS FOR CONVEYANCE AND PERMANENT EASEMENTS:

The required accuracy for the survey shall meet or exceed an error of the most restrictive of the following requirements:

- Closure of 1:10,000 for all urban property and rural property valued at or greater than $1,000.00 per acre.
- Closure of 1:5,000 for rural property valued at less than $1,000 per acre.
- Or minimum state requirements for surveys to be used in the conveyance of property.

The surveyor will obtain copies of tax maps and deeds for property to be acquired and all adjacent properties. Adjoining property owners shall be identified by name and deed reference. All adjoining property lines are to be delineated on the plat.

The final plat must contain a signed Surveyor's stamp. The surveyor's name, address and telephone number shall be printed on the plat and legal description in a legible manner

Norfolk Southern Railway Company, or its subsidiaries, will decide whether to attach the surveyor's plat and description to the deed.

Monuments shall not be placed on the subject parcel until the survey is approved by the Railroad's Engineering Department. When monuments are placed they will be placed at the corners and changes in curves (PC & PT including PCC, TS, SC, CS and ST points where applicable).

The survey must establish railroad valuation stationing where appropriate. This stationing must be delineated on the plat. The stationing will be established using the ties marked on the valuation map provided by the Real Estate Department. A bridge abutment or other fixed object or landmark where the location is reliable and has an established railroad valuation station shown on a valuation map may also be used to establish railroad stationing.

The plat shall state what monuments (culverts, headwalls, etc.) were used to establish the railroad stationing.

The plat must be presented to Norfolk Southern Railway Company, or its appropriate subsidiary, in a recordable format (Proper size, statements, medium, etc., for the county in which the survey is

conducted) and in digital format (AutoCAD or MicroStation convertible file). All adjoining property lines must be included on the CAD file.

The surveyor will also provide a legal description sufficient for use in a conveyance document. The description may be used within a legal document or as a referenced material. The description and plat must indicate a distance to the nearest railroad mile post and the direction of increasing railroad mile posts where appropriate. The "Point of Beginning" must be identified with the appropriate state plane coordinates in both the plat and legal description. In addition, another located corner, preferably the furthermost corner from the point of beginning, must be identified with the appropriate state plane coordinates in both the plat and the legal description.

The legal description must be submitted in PDF format and Microsoft Office Word format unless extenuating circumstances prevent the usage of that word processing program for production of the legal description.

The plat and legal description must be presented in a form and manner that the local government agency will accept for filing. Knowledge of what is acceptable is the sole responsibility of the surveyor.

6. NS REAL ESTATE ENGINEERING PLAT AND LEGAL DESCRIPTION REQUIREMENTS FOR TEMPORARY EASEMENTS:

The required accuracy for the survey shall meet or exceed an error of the most restrictive of the following requirements:

- Closure of 1:10,000 for all urban property and rural property valued at or greater than $1,000.00 per acre.
- Closure of 1:5,000 for rural property valued at less than $1,000 per acre.
- Or minimum state requirements for surveys to be used in the conveyance of property.

The survey must establish railroad valuation stationing where appropriate. This stationing must be delineated on the plat. The stationing will be established using the ties marked on the valuation map provided by the Real Estate Department. A bridge abutment or other fixed object or landmark where the location is reliable and has an established railroad valuation station shown on a valuation map may also be used to establish railroad stationing.

The plat shall state what monuments (culverts, headwalls, etc.) were used to establish the railroad stationing.

The plat must be presented to Norfolk Southern Railway Company, or its appropriate subsidiary, in a recordable format (Proper size, statements, medium, etc., for the county in which the survey is conducted).

The surveyor will also provide a legal description sufficient for use in a conveyance document. The description may be used within a legal document or as a referenced material. The description and plat must indicate a distance to the nearest railroad mile post and the direction of increasing railroad mile posts where appropriate. The "Point of Beginning" must be identified with the appropriate state plane coordinates in both the plat and legal description. In addition, another located corner, preferably the furthermost corner from the point of beginning, must be identified with the appropriate state plane coordinates in both the plat and the legal description.

The legal description must be submitted in PDF format and Microsoft Office Word format unless extenuating circumstances prevent the usage of that word processing program for production of the legal description.

The plat and legal description must be presented in a form and manner that the local government agency will accept for filing. Knowledge of what is acceptable is the sole responsibility of the surveyor.

The surveyor should check with NS Real Estate Engineering to ensure that the correct owning Company (Norfolk Southern Railway Company, Alabama Great Southern Railway Company, Cincinnati Southern Railway Company, Central of Georgia Railroad Company, etc.) is shown on the plat.

H. Norfolk Southern - Guidelines For Design of Grade Separated Structures

H.1 Overhead Grade Separation Design Criteria

1. Design
2. Clearances
   - A. Permanent Clearances
   - B. Temporary Clearances
3. Substructure Requirements
   - A. Crashwalls
   - B. Foundations
4. Superstructure Requirements
   - A. General
   - B. Protective Fencing
   - C. Structural Attachments
5. Drainage
6. Construction Excavation
7. Erosion Control
8. Miscellaneous

H.2 Underpass Grade Separation Design Criteria

1. Purpose and Scope
2. Specifications
   - A. Design Specifications
   - B. Construction Specifications
3. Bridge Layout
4. Design Loads
5. Material Requirements
6. Superstructure for Ballast Deck Railway Bridges
   - A. Acceptable Superstructure Types
   - B. Steel Superstructure
   - C. Concrete Superstructure
   - D. Bridge Deck
   - E. Design of Superstructure for Derailment
7. Substructure
8. Construction Excavation
9. Erosion Control
10. Drainage
11. Demolition, Erection, Hoisting
12. Maintenance of Railroad Traffic
13. Design Criteria & Guidelines for Main Tracks and Detours in Connection with Underpass Grade Separation
14. Plan Preparation and Submittal

H.3 Guidelines for Under Track Culverts

H.4 Norfolk Southern Design Specifications
H.4.1 Specifications for Steel
H.4.2 Specifications for Cast-in-Place Concrete
H.4.3 Specifications for Membrane Waterproofing
H.4.4 Specifications for Painting Shop Fabricated Bridge Steel
H.4.5 Specifications for Field Painting of Bridges
H.4.6 Specifications for Installation of Under Track Culverts by Open Cut Method
H.4.7 Specifications for Installation of Under Track Culverts by Jack and Bore Method
H.4.8 Specifications for Installation of Under Track Culverts by Tunneling Method

H.1 - OVERHEAD GRADE SEPARATION DESIGN CRITERIA

1. DESIGN

   A. The contract documents including plans, specifications, and project special provisions for the proposed Overhead Grade Separation Structure shall enable the contractor to perform all work while the tracks remain in service at all times throughout construction.

   B. The Project Sponsor and the Design Consultant shall coordinate all pertinent aspects of the design with the NS Public Project Engineer throughout Preliminary Engineering.

   C. The overhead structure shall be designed to satisfy these guidelines, AREMA, and all applicable sections of the AASTHO and DOT Design Manuals.

   D. Preliminary Engineering submittals as defined in the Norfolk Southern Public Projects Manual, Section 4.1.4, shall be submitted to the NS Public Project Engineer for review and approval prior to advancing to the next design phase.

   E. The Project Sponsor and/or their Design Consultant shall submit the Project Data Sheets as part of their Conceptual Package (TS&L) submission. Refer to the Public Projects Manual Appendix D for these sheets.

   F. Prior to the start of construction, all property must be appropriated through NS Real Estate. For additional NS Real Estate requirements, see Appendix J of Norfolk Southern's Public Project Manual.

2. CLEARANCES

   A. Permanent Clearances

      1. Permanent Clearances as indicated on Norfolk Southern Typical Drawing No. 1 are minimums, and greater clearances may be required to accommodate existing or proposed drainage ditches, and are preferred when they can be obtained without undue additional expense. Wherever practicable, overhead bridge structures shall have all piers and abutments located outside of the railroad right-of-way.

      2. A minimum vertical clearance of 23'-0" shall be provided, measured from top of high rail to lowest point of structure, measured from a point offset 5'6" from the centerline of track.

      3. Overhead bridge structures shall provide the specified horizontal and vertical clearances for anticipated future tracks, changes in track centers, and raising of track for maintenance purposes. This information shall be determined by inquiry to the NS Public Project Engineer.

      4. All piers located less than 25'-0 from face of pier to centerline of nearest track shall be designed with crash wall protection per Paragraph 3.A. Edges of footings shall not be closer than 13'-0" from centerline of track to provide adequate room for shoring.

      5. All piers and end slopes shall be located so that they do not interfere with existing track ditches. Where special conditions make this impossible, an explanation of such

conditions must be submitted, along with the drainage plans and calculations, to the NS Public Projects Engineer for approval.

6. The profile of the existing top of rail (500 ft. each side of proposed road crossing) should be plotted on the plans. If the track is in a sag at the proposed bridge location, the vertical clearance from the top-of-rail to the bridge should be increased sufficiently to permit raising the track enough to remove the sag. A note should be added to the profile stating: "The elevations of the existing top-of-rail profile shall be verified before beginning construction. All discrepancies shall be brought to the attention of the Norfolk Southern Public Projects Engineer."

7. Unless the signals are to be relocated as a part of the project, at the Sponsor's expense, proposed vertical and horizontal clearances shall be adjusted so that the sight distance to railroad signals is not reduced.

8. On structures to be rehabilitated or replaced, the proposed minimum vertical and horizontal clearances as well as the existing clearances shall be indicated on the General Plan and Elevation sheet.

9. The permanent clearances shall be correlated with the methods of construction so that temporary construction clearances will not be less than the minimum allowed.

B. Temporary Clearances

1. The following criteria shall govern the use of falsework and formwork above or adjacent to operated tracks.

    a. A minimum vertical clearance of 22'-0" above top of highest rail shall be maintained at all times.

    b. A minimum horizontal clearance of 13'-0" from centerline of tangent track or 14'-0" from centerline of curved track shall be maintained at all times. Additional horizontal clearance may be required in special cases to be safe for operating conditions. This additional clearance will be as determined by the Chief Engineer Bridges & Structures.

2. The minimum allowable temporary clearances shall be indicated on the General Plan and Elevation Sheet. Existing substandard clearances shall not be further reduced for the temporary construction condition without written permission from NS.

3. All proposed temporary clearances which are less than those listed above must be submitted to the NS Public Project Engineer for approval prior to construction and must also be authorized by the regulatory body of the State if less than the legally prescribed clearances.

4. The temporary clearance requirements noted above shall also apply to all other physical obstructions including, but not limited to: stockpiled materials, parked equipment, placement or driving of piles, and bracing or other construction supports.

3. SUBSTRUCTURE REQUIREMENTS

A. Crashwalls

1. AREMA Manual of Recommended Practice, Chapter 8, Article 2.1.5, latest edition, covers the requirements for crashwalls. Crashwalls are required when face of pier is closer than 25'-0" from centerline of the track (including future tracks), measured perpendicular to the track.

2. Reinforcing steel to adequately anchor the crashwalls to the column and footing shall be provided.

3. For piers of heavy construction, crashwalls may be omitted. (See AREMA 8.2.1.5.1.)

4. Bridge piers located in a seismic zone shall be designed as solid wall piers that satisfy the heavy construction criteria in AREMA 8.2.1.5.1.

5. Crashwalls for bridges not located in a seismic zone shall meet the following requirements:

   a. Crashwalls for single column piers shall be a minimum of 2'-6" thick and shall extend a minimum of 10'-0" above the top of high rail. The wall shall extend a minimum of 6'-0" beyond the column on each side in the direction parallel to the track. The face of the crashwall shall extend at least six (6) inches beyond the face of the column on the side adjacent to the track.

   b. For multi-column piers, the columns shall be connected with a wall with a minimum thickness of 2'-6". The wall shall extend a minimum of 10'-0" above the top of high rail. The wall shall extend a minimum of 2'-6" beyond the end of outside columns in a direction parallel to the track. The face of the crashwall shall extend at least six (6) inches beyond the face of the columns on the side adjacent to the track.

B. Foundations

1. Foundations shall be located so as to satisfy the permanent and temporary clearances specified in Paragraphs 2.A and 2.B of these guidelines.

2. Abutments and piers shall be oriented parallel to the centerline of tracks or as near to parallel as is feasible whenever possible.

3. Installation of piles/caissons and sheeting for abutment, pier or retaining wall foundations, temporary or permanent shoring and all other structures located on or adjacent to NS right-of-way may require a Track Monitoring program in accordance with Section 5.I of Norfolk Southern's "Special Provisions for Protection of Railway Interests."

4. Caissons/drilled shafts located within the live load influence zone shall be protected by a casing and designed for the full railroad surcharge using the Boussinesq Equation for strip loads as detailed in AREMA, Chapter 8, Section 20.3.2.2. Refer to the "Lateral Pressure from Train Loads" design references for further information.

5. The designer shall take great care to ensure the substructure is constructible without impact to train operations. This includes site access considerations and equipment placement necessary to safely perform all substructure construction.

6. Where possible, the designer shall avoid impacts to all NS communication and signal facilities and their lessees.

7. It is preferred that all substructures be located entirely outside of the NS right-of-way. Where site conditions make this impossible, a detailed right-of-way plan will be required.

4. SUPERSTRUCTURE REQUIREMENTS

A. General

1. The use of cast in place main load carrying elements and spliced precast/prestressed girders over the operating tracks is not permitted.

2. The use of stay in place deck forms for cast in place deck construction is encouraged.

3. Girder splices shall not be located in the span over the railroad property. In the event that a splice must be located in the span over the railroad, the designer shall submit a variance request to NS for review and approval. At a minimum, the variance request shall include:

    a. A detailed explanation for the desired splice locations and all considered alternatives.
    b. A suggested girder erection sequence presented both in plan and elevation.
        a. Identify whether 1 or 2 girder picks are likely
        b. Identify the order for each segment(s) that is being erected.
    c. Temporary Support Tower requirements and possible locations.
    d. Possible crane locations considering potential girder delivery locations, temporary laydown areas, and the 150% safety factor in the Special Provisions.
    e. Estimated time durations for contractor activities impacting train operations. Consideration should be given to:
        a. Time to setup shoring towers (if required).
        b. Time to fly girder, place on bearings, install field splices and diaphragms (minimum required bolts), and install temporary or permanent bracing at which time the crane can be released from the girder and boom can be swung parallel to or away from the tracks allowing train operations to resume.

    If approved by NS, girder splices and any associated temporary support towers shall be located at least 15’-0” from the centerline of the nearest track.

4. The designer shall take great care to ensure the superstructure elements are constructible without impact to train operations. This includes site access considerations and equipment placement necessary to safely perform all superstructure construction. The contractor’s equipment will not be permitted to work from the tracks.

5. For complex structures and/or site specific access concerns, NS may require the designer to specify a suggested erection scheme and confirm the availability of equipment satisfying the constructability requirements in these guidelines and in Norfolk Southern's Special Provisions for Protection of Railway Interests.

6. The superstructure and substructure shall be designed to support all attachments, including but not limited to protective fence and proposed structure mounted utilities.

7. On structure drainage shall comply with Paragraph 5 – Drainage of these guidelines.

B. Protective Fencing

1. Where sidewalks are present, protective fencing shall be provided on the sidewalk side of overhead structures.

2. Protective fencing may be required as directed on both sides of the structure, especially where there is a history of vandalism.

3. The protective fence limits shall extend to the NS right-of-way lines, the entire length of the span over the tracks or 25' beyond the centerline of the outermost track, whichever is greater.

4. For further details refer to Norfolk Southern Typical Drawing No. 3 - Overhead Bridge Details - Bridge Fencing. Alternate fence details will be evaluated on a case by case basis.

5. Pedestrian Bridges shall be completely enclosed by protective fencing or canopies to protect the NS right-of-way from falling debris.

C. Structural Attachments

1. Structure mounted utility attachments over NS shall satisfy the requirements of the local Division Office and the "Specifications for Pipeline Occupancy of Norfolk Southern Corporation Property (NSCE-8)." Installation or modification of utilities over NS property must be coordinated with the Norfolk Southern Pipe and Wire Group and may be subject to a separate license agreement. (http://www.nspipeandwire.com)

2. Lighting and Roadway Signs mounted on the structure shall not be positioned in the spans directly over the NS tracks.

5. DRAINAGE

A. The bridge and roadway plans should indicate all proposed drainage encroachments on Railroad right-of-way. Drainage ditches and structure details shall be developed in accordance with the requirements of AREMA Chapter 1 and Norfolk Southern Typical Drawing No. 1 - Overhead Bridge Details - Permanent Clearances.

B. The designer shall consider all necessary temporary drainage controls when phased construction is required. Plans shall clearly depict the temporary controls that will be provided. NS reserves the right to request drainage calculations demonstrating the adequacy of the temporary drainage controls.

C. In order to evaluate the impact of the proposed project relative to existing site drainage, cross sections perpendicular to the centerline of track should be submitted along with the drainage plans. At each bridge site, 5-10 cross sections should be submitted to adequately depict the site conditions; however, a minimum of 5 cross sections will be required. One cross section is to be taken at the centerline of the road crossing, one at each limit of construction and one located midway between each end and the center. The existing railroad ditch and the proposed toe of slope for the end fill should be located on all cross section.

D. Drainage plans must be included with the bridge and roadway plans submitted to the Chief Engineer Bridges & Structures for approval. These plans must include hydrologic computations, indicating the rainfall intensity and duration of the design storm used, as well as the method of analysis. A 100-year recurrence interval is the minimum design storm. If the proposed project will not change the quantity and/or character of flow in the Railway's ditches and/or drainage structures; the plans shall include a general note stating this.

E. Maintaining the existing drainage and providing for future drainage improvements is of the utmost importance. Existing track ditches must be maintained at all times.

F. Where the project design calls for an increase in the drainage flow through the railroad embankment, the flow may be required to be handled by means of a separate drainage structure. See Section H.3 of these Guidelines for "Under Track Culverts", Section 4 of the NSCE-8, and Norfolk Southern's "Special Provisions for Protection of Railway Interests" for further information. The construction of the drainage structure shall satisfy the requirements of the local Division Office and these guidelines. Additional under track drainage facilities shall be shown on the right-of-way plan and property must be appropriated with the NS Real Estate Group.

G. Horizontal clearances must provide sufficient space for construction of the required track ditch parallel to the typical roadbed section.

H. Demolition of the existing substructure located in or adjacent to the track ditch shall extend a sufficient depth below grade to enable restoration of the existing/proposed track ditch, but in no case less than 2'-0" below final grade.

I. When the proposed construction will change the quantity and/or character of flow in the track ditches, the ditches shall be modified as required to handle the drainage. The ditch design shall be submitted to the NS Public Projects Engineer for approval.

J. No scuppers or other deck drains, roadway drainage, catch basins, inlets or outlets are permitted to drain onto Railway property. Any variance of this policy must have the approval of the NS Public Projects Engineer. If an exception is granted, maintenance of the drainage structures will be the responsibility of others and not the Railway. Drainage from scuppers and deck drains must be conveyed through pipes, preferably to a point off Railroad property. If a variance of this policy is granted, deck drains and scuppers will not be permitted on the portion of the bridge between the parallel track ditches. (See Norfolk Southern Typical Drawing No. 2 – Overhead Bridge Details - Ditch and Drainage). If the drainage must be conveyed into a railroad ditch, calculations must be provided to the NS Public Projects Engineer for approval that indicates the ability of the ditch to carry the additional runoff.

K. Approval of the drainage plan does not relieve the submitting agency and/or designer of ultimate responsibility and liability for a satisfactory drainage design.

6. CONSTRUCTION EXCAVATION

A. Footings for all piers, columns, walls or other facilities shall be located and designed so that any temporary sheeting and shoring for support of adjacent track or tracks during construction will not be closer than 10'-0" from centerline of track. Edges of footings located no closer than 13'-0" from centerline of track should satisfy the minimum of 10'-0". Excavations will not be allowed closer than 10'-0" from centerline of track unless specifically approved by the NS Public Projects Engineer.

B. All plans and calculations for shoring shall be prepared, signed, and sealed by a Registered Professional Engineer licensed in the state of the project. The Engineer will be responsible for the accuracy for all controlling dimensions as well as the selection of soil design values which will accurately reflect the actual field conditions.

C. The plans shall contain details of the shoring system showing sizes of all structural members, details of connection, and embedment depth. The plans shall include a plan view showing all the proposed excavations and distances from centerline of track to face of excavation. Plans shall show a section normal to the track showing the shoring location relative to the centerline of track and showing the height of sheeting and track elevation in relation to the bottom of excavation. The plans must be complete and accurately describe the nature of the work.

D. Plans and calculations covering all falsework, shoring, excavation supports, etc., adjacent to railroad tracks shall be submitted for review and approval in accordance with the Norfolk Southern's Special Provisions for Protection of Railway Interests.

E. Shoring located in Zone 2 as shown NS Typical Drawing No. 4 – Shoring Requirements, should be designed using interlocking sheeting. Soldier piles and lagging will be considered only when its use is specifically approved by the NS Public Projects Engineer. Consideration for the use of soldier piles and lagging will only be made if the required penetration of steel sheet piling cannot be obtained and when dry, stable material will be encountered.

F. All excavations within the limits shown on Norfolk Southern Typical Drawing No. 4 – Shoring Requirements shall be designed for Railroad live load surcharge. All shoring designed for Railroad live load surcharge shall be based on Cooper's E-80 live load. AREMA Chapter 8, Part 20, Section C, Paragraph 2(b), refers to the Boussinesq equation as a method to determine lateral pressure values for Railroad surcharge loading. For a chart and graph indicating the lateral pressures associated with various depths of excavation and distances from the centerline of track as determined by the Boussinesq equation that may be used as a guide, refer to Norfolk Southern Typical Drawing No. 5 – Shoring Design Guide - Lateral Pressures from Train Loads. The use of the AREMA Boussinesq equation is not the only method available to obtain lateral pressures for surcharge loading; however, pressure values significantly less than those determined by the Boussinesq equation do not adequately consider Railroad live load surcharge.

G. Calculations for the proposed shoring should include deflection calculations. The maximum deflection for excavations within 18'-0" of the centerline of the nearest track shall be 3/8". For all other cases, the max deflection shall not exceed 1/2".

H. Railings shall be constructed (in accordance with plans approved by the NS Public Projects Engineer) around all excavations on Railroad's property. Walkways with railings shall be constructed (in accordance with plans approved by the NS Public Projects Engineer) over open excavations adjacent to the tracks located within the normal walkway. Refer to AREMA Section

15 for walkway and railing design criteria. Railings shall not be closer than 10'-0" horizontally from centerline of track.

I. Approval of the excavation plan does not relieve the submitting Project Sponsor and/or designer and/or contractor of ultimate responsibility and liability for the excavation plan.

7. EROSION CONTROL

A. Embankment slopes adjacent to the track must be paved for a minimum of two (2) feet beyond the outside edge of the bridge foundation structure and, where conditions warrant, the slope paving shall be extended around the curved face of the endroll to a line opposite the abutment. The pavement shall consist of a prepared sub-base and filter fabric with a 4-inch minimum thickness of Class B concrete or placed grouted rip-rap on the surface. NOTE: If warranted by site specific information and contingent upon NS approval, in select instances NS may approve deck drainage or highway drainage to be discharged onto the embankment slopes. If the discharge of deck or highway drainage onto the embankment slopes is permitted, concrete paving must be used.

B. The bridge and roadway plans shall indicate the proposed methods of erosion control and must specifically address means to prevent silt accumulation in the ditches and culverts and to prevent fouling the track ballast and sub-ballast. If the plans do not show erosion control, the Sponsor's Contractor must submit a proposed method of erosion control and must have the method approved by the NS Public Project Engineer prior to beginning any grading on the project site.

C. Existing track ditches shall be maintained at all times throughout the construction period. After the construction has been completed, all erosion control devices must be removed, all deposits of silt removed, and the ditches must be restored.

D. Approval of the erosion control plan does not relieve the submitting Project Sponsor and/or designer of ultimate responsibility and liability for a satisfactory erosion control plan.

8. MISCELLANEOUS

A. The Railroad shall be furnished as-built drawings showing the actual clearances as constructed. Depth, size, and location of all foundation components shall be shown.

B. The plans for the overhead bridge shall show dimensioned locations of all existing utilities, as well as the location of all proposed utilities, within the Railroad's right-of-way. The plans shall define the responsibility for locating, marking, or installing and protecting such utilities. The Railroad is not responsible for locating utilities. Utility review shall be handled with Norfolk Southern Pipe and Wire and Norfolk Southern's Real Estate Groups.

C. Attention shall be given to the need to provide a walkway adjacent to switches and tracks where trainmen are required to work on the ground.

D. If fiber optic cables are presently buried on the Railroad right-of-way, or if such installations are scheduled during the course of an overhead bridge project, then the presence of such facilities shall be considered in the overhead bridge design and appropriate measures for protection of the fiber optic cables shall be addressed on the plans and in the contract documents.

E. In accordance with Paragraph 4.B.5 above, pedestrian fencing should be provided for all structures designed to carry pedestrian or bicycle traffic. Consideration should be given to

provide pedestrian fencing on other structures where special circumstances, such as past history of vandalism, may require.

F. Right-of-way and or security fence shall be provided as directed by the NS Public Project Engineer. Each project will be evaluated on a case by case basis. Fence may be required on top of abutments, wingwalls, retaining walls, and/or along the right-of-way to ensure that pedestrian or bicycle traffic is channeled on to the proposed structure and away from the NS right-of-way. See Norfolk Southern's Typical Drawing No. 21 - Right-of-Way Fencing and Norfolk Southern's Typical Drawing No. 22 – Security Fencing for further details.

G. Preliminary plan packages should be compiled and submitted as detailed in the Public Projects Manual and these guidelines. See Norfolk Southern's Public Projects Manual Appendix C - Schedule for Review of Grade Separation Projects.

H.2 - UNDERPASS GRADE SEPARATION DESIGN CRITERIA

1. PURPOSE AND SCOPE

    A. These criteria modify and supplement the applicable sections of the American Railway Engineering and Maintenance-of-Way Association (AREMA) Manual of Recommended Practice in connection with the design of ballasted deck railway bridges, in order to produce a structure which will minimize interference with mechanized track maintenance, as well as reduce the effects expected from derailments.

2. SPECIFICATIONS

    A. Design Specifications:

        1. American Railway Engineering and Maintenance-of-Way Association Manual of Recommended Practice, Current Edition.

    B. Construction Specifications:

        1. Fabrication and Erection of Structural Steel (AREMA Chapter 15, Part 3 and 4).

        2. Concrete Structures and Foundations (AREMA Chapter 8, Part 1, 4, and 5).

        3. Timber Structures (AREMA Chapter 7, Part 4)

        4. Damp proofing and Waterproofing (AREMA Chapter 8, Part 29).

        5. The Standard Specifications of the State Highway Department where the bridge is to be constructed shall be used for the remainder of the construction.

3. BRIDGE LAYOUT

    A. The following items shall be considered when the initial bridge layout is prepared:

        1. The distance from the centerline of bridge to the nearest milepost shall be shown on the plan, and the Railroad Valuation Stations shall be shown at the front face of backwalls.

        2. For bridges located within a curve, the girders, abutments and piers shall be located with reference to chords.

        3. All spans are to be simply supported.

        4. The preferred angle of the roadway crossing relative to the centerline of track is 90°. However, in cases where a 90° crossing cannot be obtained, the angle of the roadway crossing relative to the centerline of track shall not deviate more than 30° from the preferred 90° crossing.

        5. All Diaphragms shall be oriented perpendicular to the girders/beams and the chords of tracks on skewed and/or curved structures.

6. Walkways (or a minimum of 10'-0" clearance to the handrail) are required on both sides of the track. This includes all temporary spans required during construction. On temporary structures with multiple tracks, the centers are to be filled.

7. In the case of trails passing under NS bridges, a canopy roof shall be constructed that is capable of protecting users from a 50lb. weight dropped from the bridge deck.

8. Vandal fencing shall be provided on all underpass structures in urban areas and on underpass structures in rural areas where pedestrian traffic patterns, past history of vandalism, or other conditions near the project site (such as nearby schools), may warrant the use of vandal fencing. For further details refer to Norfolk Southern's Typical Drawing No. 14 – Vandal Fencing with Handrail I and Typical Drawing No. 15 – Vandal Fencing with Handrail II.

9. The bridge layout shall accommodate any requirements for a future track(s) and/or access road at the direction of Norfolk Southern Public Projects Engineer.

4. DESIGN LOADS

A. Railroad bridges shall be designed for all loads specified in Chapters 8, 9 and 15 of the AREMA Manual of Recommended Practice.

B. Design loads shall be applied to include provisions for the potential presence of future additional tracks. The designer shall assume that these tracks may be located anywhere on the structure.

C. Live Load: Cooper E-80, diesel impact /Alternative Live Load.

1. If prestressed concrete box beams are permitted, the live load distribution shall be in accordance with AREMA 8.2.2.3(c) and the design shall assume that the live load is not equally distributed to all box beams.

D. Dead Load: design for all applicable dead loads and include the weight of an additional 6" of ballast for future track surfacing.

E. Seismic Load: Seismic design shall comply with the criteria of the current edition of AREMA, Chapter 9 - Seismic Design for Railway Structures.

F. Under normal working loads, some composite action may be expected between a concrete deck and its supporting steel members, whether or not special devices are furnished for shear transference. The bottom of the deck slab shall be placed at least one inch (1") below top of supporting steel members. For design purposes, however, the supporting steel members shall be proportioned to carry the entire load without taking into account any stresses which may be induced in the concrete slab by composite action. Composite action may be taken into account when satisfying the deflection-length ratio requirement of Chapter 15, Article 1.2.5 of the AREMA Manual of Recommended Practice. Shear transfer devices shall be installed for bridges with concrete decks supported by steel members.

5. MATERIAL REQUIREMENTS

A. Minimum material size requirements:

1. The minimum thickness of any steel member is 1/2”

2. The minimum bolt diameter is 7/8”

3. The minimum anchor rod diameter is 1-1/4”

4. The minimum thickness of any preformed bearing pad is 1/2”

5. The minimum thickness of any steel sole plates is 1”

B. Structural Steel:

1. Structural Steel shall be in accordance with Norfolk Southern Corporation Specifications for Structural Steel. Refer to Norfolk Southern’s Public Projects Manual Appendix H.4.1.

2. Hot-dipped galvanized high strength bolts are not permitted.

3. All structural steel shall be painted, including weathering steel. Painting shall be in accordance with current Norfolk Southern Corporation Paint Specifications for Shop Fabricated Bridge Steel. Refer to Norfolk Southern’s Public Projects Manual Appendix H.4.4 for Specifications for Painting Shop Fabricated Bridge Steel.

C. Concrete:

1. The allowable bearing pressures as contained in AREMA Chapter 8 are to be used for concrete superstructure bearing on concrete substructure.

2. The allowable bearing pressures as contained in AREMA Chapter 15 are to be used for steel superstructure bearing on concrete substructure.

3. Concrete shall be in accordance with the current Norfolk Southern Corporation Specifications for Cast-In-Place Concrete. Refer to Norfolk Southern’s Public Projects Manual Appendix H.4.2 for Specifications for Cast-in-Place Concrete.

4. Reinforcing Steel: Shall be in accordance with the reinforcing steel section of the current Norfolk Southern Corporation Specifications for Cast-In-Place Concrete. Refer to Norfolk Southern’s Public Projects Manual Appendix H.4.2 for Specifications for Cast-in-Place Concrete.

6. SUPERSTRUCTURE FOR BALLAST DECK RAILWAY BRIDGES

A. Acceptable Superstructure Types

1. The following is a list of underpass structure types that are acceptable to the Railroad and listed in the order of preference. The Railroad’s preferred superstructure type is the highest listed feasible alternative unless a detailed type selection report provides

justification that a lower listed alternative is more beneficial to the Railroad and the project.

a. Rolled Beams with Concrete Deck
b. Steel Plate Girders with Concrete Deck
c. Prestressed Precast Concrete Box Beams for spans less than 50'-0". A sacrificial beam must be included on each side.
d. Prestressed Precast Concrete AASHTO Type Beams with Concrete Deck for spans less than 50'-0".
e. Steel Through Plate Girders or Steel Through Truss with Steel Decks will only be permitted after approval by the Railroad's Chief Engineer Bridges and Structures, and if approved must be at a 90 degree angle to track (main chord if track is curved) and the steel deck must be welded and not bolted to the floor beams.

2. Refer to Norfolk Southern's Typical Drawing Nos. 11 through 18 for superstructure details.

B. Steel Superstructure:

1. All Fracture Critical Members as defined by AREMA shall be designated as FCM on the plans and all required testing procedures for FCMs should be noted in the plans. In addition to those members designated as FCM by AREMA, all welded plate girders shall be considered FCM regardless of any provided redundancy.

2. All web-to-flange welds shall be full penetration groove welds.

3. Intermediate Stiffeners:

a. All intermediate stiffeners shall be welded to the top flange.

b. A stiffener connection plate is required only if the stiffener is connected to a diaphragm, or if the stiffener is opposite a diaphragm on the other side of the web. If an intermediate stiffener is not connected to a diaphragm, and is not opposite a diaphragm on the other side of the web, it should not be attached to the bottom flange. It should be a "tight fit" with no weld and no stiffener connection plate.

c. The stiffener connection plate shall be bolted to the flange prior to welding to the stiffener.

4. Bearing Stiffeners:

a. Bearing stiffeners may be milled to bear or welded to the top flange with a full penetration groove weld.

b. Bearing stiffeners may be milled to bear or welded to the bottom flange with a full penetration groove weld. Use of a stiffener connection plate which is bolted to the bottom flange is also allowable.

5. Crossframes and Diaphragms:

    a. The supporting steel members having depth greater than 3'-6" and spaced more than 4'-0" on centers, shall be braced with cross frames.

    b. The angle of cross frame diagonals with the vertical shall not exceed 60 degrees, or be less than 30 degrees.

    c. Supporting steel members not requiring cross frames shall be braced with approved diaphragms which are as deep as the depth of the member will permit. Such diaphragms shall be connected to the members' web by means of suitable angles, bolted, or equivalent connection plates, if welded.

    d. Cross frame and diaphragm spacing shall not exceed 12 feet.

    e. Jacking stiffeners are required in all end diaphragms. Jacking stiffeners may be eliminated if an alternate jacking method is approved.

    f. Access holes, minimum 15" diameter, are required in all end diaphragms. Access holes are not required for intermediate diaphragms.

6. Bearing sole plates shall be welded directly to the girder flanges in the shop, to ensure proper alignment with the bearing stiffeners.

7. Steel supporting members shall be equally spaced across the width of the structure. In Not less than two support members per rail shall be provided.

8. The exterior overhang of the deck slab, measured from centerline of the outside supporting member to outside face of curb shall be not more than 4'-0", and any steel supporting member added on account of this requirement shall be of the same section as those used under the track. Any such exterior beam added will be assumed to carry an appropriate portion of the dead load.

C. Concrete Superstructure

1. Transverse tie rods shall be provided for all concrete spans with single cell box beams, and shall be used at span ends and intermediately spaced at maximum intervals of 25'-0".

    a. The minimum size of tie rod shall be 1-1/4 inches in diameter. Tie Rods shall be threaded steel bars with a minimum fy = 36ksi. Tie rods shall be tensioned as necessary to ensure that all beam sides are in contact without causing any vertical displacement of the beams from the bearings. The tie rod shall be protected in one of the following ways:

        i. Rod, plates and nuts shall be hot dip galvanized per ASTM A123 and A153 specifications.

        ii. All assembly parts left plain but void between rod and hole to be pressure grouted. The tie rod anchor assembly shall be recessed into the concrete and shall have 1 inch minimum grout cover.

2. All Box Shaped or AASHTO Type Precast Prestressed Concrete Beams for all spans shall be designed with end and interior diaphragms. Interior diaphragms shall be spaced equally across the span length.

D. Bridge Deck

1. On a single track, the bridge deck shall not be less than 20' wide, measured from inside face of the ballast curb to inside face of ballast curb. The minimum distance from centerline of track to inside face of ballast curb shall not be less than 10'-0".

2. For multiple main tracks, the minimum distance from center line of each track to the inside face of the adjacent ballast curb shall not be less than 10'-0".

3. The minimum thickness of the concrete bridge deck shall be 8" at low points from a line parallel with top of support member.

4. Ballast Curb Height: The top of the ballast curb shall extend a minimum of 18" above the top of the concrete deck.

5. Handrail: Adequate handrails shall be provided on both sides of the structure and all bridge deck designs shall provide fastening arrangements for a handrail such that the handrail will be a minimum of 10' horizontal clear distance from the centerline of track on both sides. Refer to Norfolk Southern Typical Drawing Nos. 13 through 15 for handrail details.

6. Depth of Ballast: On superelevated track, the depth of ballast underneath the low end of crossties shall be 8" minimum. On track not superelevated, the depth of ballast underneath the crossties shall be 9" minimum. Ballast shall extend to both curb lines and the depth of ballast at the curbs shall be 8". The approach section to the bridge shall meet the requirements of Norfolk Southern's Typical Roadbed Requirements.

7. Drainage: the top of the ballast deck shall be sloped transversely not less than one percent in order to drain. Low points in the top of deck shall be located not less than 6'-0" from a centerline of any track and shall be within the outside beams or girders of bridge. A longitudinal collection system shall be provided to dispose of drainage without permitting it to enter the ballast section of backfill beyond the bridge. This system shall be sloped not less than one percent in order to drain. If an approach grade descends toward the bridge, drainage from the approach ballast and top of roadbed section shall be intercepted by appropriate means so that it will not come onto the bridge. For deck drainage details refer to Norfolk Southern Typical Drawing Nos. 16 & 17 – Underpass Bridge Details - Deck Drain I & II.

8. Waterproofing and Asphalt Panels: Waterproofing membranes and asphalt protection panels shall be used on all bridge decks, and all material used shall comply with AREMA Manual of Recommended Practice, Chapter 8, Part 29 and Norfolk Southern Corporation Specification for Membrane Waterproofing. Waterproofing must be provided for the full width of the deck. For waterproofing details refer to Norfolk Southern Typical Drawing No. 18 – Underpass Bridge Details - Waterproofing.

9. Reinforcing Steel: All reinforcing steel in the concrete deck and curbs shall be epoxy-coated.

E. Design of Superstructure for Derailment:

1. The deck slab beyond the outermost support shall be adequate to resist a derailment condition involving an axle load, plus an impact load equal to LLxLL / (DL+LL) distributed uniformly over 5'-0" in a direction parallel to the track and 7'-6" in a direction at right angles to the track, with 7'-6" distance measured from the inside face of curb. Allowable unit stresses in concrete and reinforcing steel shall be not more than 25 percent greater than the normal allowable unit stresses.

2. The supporting members whose centerlines measure not more than 11'-0" from the outside face of curb shall be considered as carrying the derailed load. An impact load, equal to 0.8x live load, shall be provided. Allowable unit stresses in steel shall be not more than 70 percent greater than the normal allowable unit stresses.

7. SUBSTRUCTURE

A. The concrete substructure units shall be designed in accordance with Chapter 8 of the AREMA Manual of Recommended Practice.

B. Keyed construction joints should utilize raised keys rather than depressed keys.

C. Anchor bolts should be installed in preformed holes rather than drilled holes.

D. Abutments:

1. The abutment shall be designed in accordance with the requirements of Chapter 8, Part 5 of the AREMA Manual of Recommended Practice.

2. The abutment shall be wide enough to provide for a 14'-0" shoulder, measured from the centerline at the nearest track on each side. In case of multiple track bridges, the abutment width shall be sufficient to provide for standard 14'-0" shoulder on both sides and 14'-0" center to center between tracks. Wingwalls shall be designed to support 2 horizontal: 1 vertical embankment slopes.

3. There shall be a minimum of 4" between end of structural steel and face of backwall.

4. Use front face of backwall and centerline of track as reference for abutment layout.

5. Provide a minimum edge distance of 6" from edge of the masonry plate or shoe to edge of concrete.

6. The backwall shall be extended the full depth of the abutments on skewed structures to provide full support for the ties.

7. Underdrain pipes are required behind the bridge abutments. These pipes should be perforated, bituminous coated corrugated metal pipe (PVC pipe is not allowed).

8. Handrails shall be provided on the tops of wingwalls. A minimal separation shall be provided between the handrails on the bridge deck and the handrails on the wingwalls to prevent a falling hazard.

9. The end joints of the bridge should be vertical joints between the deck and backwall, rather than a horizontal joint with the deck extending over the top of backwall.

E. Piers:

1. Provide a minimum edge distance of 6” from edge of masonry plate or shoe to edge of concrete.

2. Provide a minimum of 18” beyond the outside edge of the outermost masonry plate or shoe to the end of the pier.

3. Provide 4” minimum clearance between ends of structural steel.

4. A solid wall pier with a minimum thickness of 4’-0” is preferred.

8. CONSTRUCTION EXCAVATION

A. Footings for all piers, columns, walls or other facilities shall be located and designed so that any temporary sheeting and shoring for support of adjacent track or tracks during construction will not be closer than 10’-0” from centerline of track. Edges of footings located no closer than 13’-0” from centerline of track should satisfy the minimum of 10’-0”. Excavations will not be allowed closer than 10’-0” from centerline of track unless specifically approved by the NS Public Projects Engineer.

B. All plans and calculations for shoring shall be prepared, signed, and sealed by a Registered Professional Engineer licensed in the state of the project. The Engineer will be responsible for the accuracy for all controlling dimensions as well as the selection of soil design values which will accurately reflect the actual field conditions.

C. The plans shall contain details of the shoring system showing sizes of all structural members, details of connection, and embedment depth. The plans shall include a plan view showing all the proposed excavations and distances from centerline of track to face of excavation. Plans shall show a section normal to the track showing the shoring location relative to the centerline of track and showing the height of sheeting and track elevation in relation to the bottom of excavation. The plans must be complete and accurately describe the nature of the work.

D. Plans and calculations covering all falsework, shoring, excavation supports, etc., adjacent to railroad tracks shall be submitted for review and approval in accordance with the Norfolk Southerns’ Special Provisions for Protection of Railway Interests.

E. Shoring located in Zone 2 as shown NS Typical Drawing No. 4 – Shoring Requirements, should be designed using interlocking sheeting. Soldier piles and lagging will be considered only when its use is specifically approved by the NS Public Projects Engineer. Consideration for the use of soldier piles and lagging will only be made if the required penetration of steel sheet piling cannot be obtained and when dry, stable material will be encountered.

F. All excavations within the limits shown on Norfolk Southern Typical Drawing No. 4 – Shoring Requirements shall be designed for Railroad live load surcharge. All shoring designed for Railroad live load surcharge shall be based on Cooper’s E-80 live load. AREMA Chapter 8, Part 20, Section C, Paragraph 2(b), refers to the Boussinesq equation as a method to determine lateral

pressure values for Railroad surcharge loading. For a chart and graph indicating the lateral pressures associated with various depths of excavation and distances from the centerline of track as determined by the Boussinesq equation that may be used as a guide, refer to Norfolk Southern Typical Drawing No. 5 – Shoring Design Guide - Lateral Pressures from Train Loads. The use of the AREMA Boussinesq equation is not the only method available to obtain lateral pressures for surcharge loading; however, pressure values significantly less than those determined by the Boussinesq equation do not adequately consider Railroad live load surcharge.

G. Calculations for the proposed shoring should include deflection calculations. The maximum deflection for excavations within 18'-0" of the centerline of the nearest track shall be 3/8". For all other cases, the max deflection shall not exceed 1/2".

H. Railings shall be constructed (in accordance with plans approved by the NS Public Projects Engineer) around all excavations on Railroad's property. Walkways with railings shall be constructed (in accordance with plans approved by the NS Public Projects Engineer) over open excavations adjacent to the tracks located within the normal walkway. Refer to AREMA Section 15 for walking and railing design criteria. Railings shall not be closer than 10'-0" horizontally from centerline of track.

I. Approval of the excavation plan does not relieve the submitting Project Sponsor and/or designer and/or contractor of ultimate responsibility and liability for the excavation plan.

9. EROSION CONTROL

A. The general plans for the bridge shall indicate the proposed methods of erosion control and must specifically address means to prevent silt accumulation in the ditches and culverts and to prevent fouling the track ballast and sub-ballast. If the plans do not show erosion control, the Sponsor's Contractor must submit a proposed method of erosion control and must have the method approved by the NS Public Projects Engineer prior to beginning any grading on the project site.

B. Existing track ditches shall be maintained at all times throughout the construction period. After the construction has been completed, all erosion control devices must be removed, all deposits of silt removed, and the ditches must be restored.

C. Approval of the erosion control plan does not relieve the submitting Project Sponsor and/or designer of ultimate responsibility and liability for a satisfactory erosion control plan.

10. DRAINAGE

A. Maintaining the existing drainage and providing for future drainage improvements is of the utmost importance. Existing track ditches must be maintained at all times.

B. Drainage plans must be included with the general plans submitted to the NS Public Projects Engineer for approval. These plans must include hydrologic computations, indicating the rainfall intensity and duration of the design storm used, as well as the method of analysis. A 100-year recurrence interval is the minimum design storm.

C. Where project design calls for an increase in the flow through the railroad embankment, the flow may be required to be handled by means of a separate drainage structure. See Norfolk Southern Public Projects Manual Appendix H.3 - Guidelines for Under Track Culverts.

D. Horizontal clearances must provide sufficient space for construction of the required track ditch parallel to the typical roadbed section. If an adequate ditch cannot be provided, then a culvert of sufficient size (a minimum of 36" diameter CMP) must be provided.

E. When the proposed construction will change the quantity and/or character of flow in the track ditches, the ditches shall be modified as required to handle the drainage. Ditches shall be designed in accordance with good drainage engineering practices.

F. No roadway drainage, catch basins, inlets or outlets are permitted to drain onto Railway property. Any variance of this policy must have the approval of the NS Public Projects Engineer. If an exception is granted, maintenance of the drainage structures will be the responsibility of others and not the Railway. If the drainage must be conveyed into a railroad ditch, calculations must be provided to the NS Public Projects Engineer for approval that indicate the ability of the ditch to carry the additional runoff.

G. In order to evaluate the impact of the proposed project relative to existing site drainage, cross sections perpendicular to the centerline of track should be submitted along with the drainage plans.

H. Approval of the drainage plan does not relieve the submitting Project Sponsor and/or designer of ultimate responsibility and liability for a satisfactory drainage design.

11. DEMOLITION. ERECTION, HOISTING

A. For Demolition Erection and Hoisting Requirements, refer to Norfolk Southern Public Projects Manual Appendix E - Norfolk Southern's Special Provisions for Protection of Railway Interests, Section 5 – Construction Procedures.

12. MAINTENANCE OF RAILROAD TRAFFIC

A. It is essential that the construction be performed with a minimum interference with rail traffic. Continuity of safe rail operations will be required for the duration of the project.

B. The most effective method of maintaining traffic is to temporarily re-route rail traffic around the construction site using detour tracks. Detour Tracks shall be designed in accordance with Paragraph 13 - DESIGN CRITERIA & GUIDELINES FOR MAIN TRACKS AND DETOURS IN CONNECTION WITH UNDERPASS GRADE SEPARATION. All design requirements will be furnished by the NS Public Projects Engineer.

C. A detailed sequence of construction shall be shown on the plans. When construction requires total interruption of rail traffic, an estimate of the time required will be shown in the procedure. This interval must be within the approved time frame furnished by the Railway.

D. Prior to start of any construction on Railroad's right-of-way, written approval from the Railroad for the construction procedure must be secured.

E. Railroad will cooperate fully with the responsible Project Sponsor to provide as much track time as possible. The Project Sponsor should contact the NS Public Projects Engineer in the preliminary design state to determine the Railroad's operational requirements, such as design speed, maximum curvature and superelevation, etc.

13. DESIGN CRITERIA & GUIDELINES FOR MAIN TRACKS AND DETOURS IN CONNECTION WITH UNDERPASS GRADE SEPARATION

A. Vertical Alignment:

1. Proposed grades (g) should not exceed one percent (1%).

2. Proposed rate of change (r) of vertical curves should comply with AREMA Chapter 5, Section 3.6.

B. Horizontal Alignment:

1. All horizontal curves should include spirals of correct length and the appropriate and proper superelevation on the proposed curves. Spirals may be required between the circular curves of a compound curve depending upon superelevation changes and/or the magnitude of the difference in degree of curvature based on design speed. See MW&S Standard Procedure #240. Refer to Norfolk Southern Typical Drawing No. 7 - Track Design Guide - Curve Superelevation.

2. All reverse curvature must include a minimum of 220 feet of tangent track between spirals of reverse curves.

3. Horizontal circular curves should be a minimum of 100 feet long.

C. Information to be shown on the Plans:

1. The proposed alignment should show stationing for all PI, TS, SC, CS and ST.

a. PI - Point of intersection
b. TS - Tangent to spiral
c. SC - Spiral to curve
d. CS - Curve to spiral
e. ST - Spiral to tangent

2. The following data should be shown on all horizontal curves:

a. The design speed in miles per hour (MPH).
b. The station of the PI
c. I - Angle at the intersection of the tangents
d. D - Degree of curve of the central circular curve
e. R - Radius of curve of the central circular curve
f. L - Length of the spiral
g. Δ - Central angle of the whole spiral
h. SE - Superelevation (in inches)
i. Lc - Length of the circular curve
j. Ts - Distance from the TS to PI

D. All horizontal curves distances should be calculated using the chord definition.

E. A typical roadbed section should be shown on the plans in compliance with Norfolk Southern Typical Drawing Nos. 8 through 10 (Roadbed Sections).

F. Existing and proposed top of rail profile should be shown at 50' stations and at other locations, such as point of switches, etc.

G. Cross-sections:

1. Cross-sections should be shown at a maximum of 50' intervals and should be taken perpendicular to the centerline of the main track and extend to the right of way or construction limits, whichever is greater. A cross-section should be shown at all drainage structures, and other special circumstances that require sections at less than 50' intervals. Information included on each section should show top of rail elevation, existing and proposed ground line elevation points, and the horizontal distances from the centerline of the main track to each elevation point. Also each cross-section should show the proposed and existing right of way line.

2. Also, cross-sections should be taken at all drainage culverts and structures, and other special circumstances (i.e. Abrupt change in topography, soil condition, etc.). Cross-sections on drainage structures should include the invert flow line elevations on both ends of the structures.

3. Grading shall not occur within 9' of centerline of existing main track.

H. The proposed and existing right of way should be shown on the plans of the proposed alignment or relocation.

I. The horizontal alignment and profile for existing tracks should be shown for a minimum of 500' beyond the construction limits of the proposal.

14. PLAN PREPARATION AND SUBMITTAL

A. The Project Sponsor and/or their Design Consultant shall submit the Project Data Sheets as part of their Conceptual Package (TS&L) submission. Refer to the Public Projects Manual Appendix D for these sheets.

B. Preliminary plan packages should be compiled and submitted as detailed in the Public Projects Manual and these guidelines. See Norfolk Southern's Public Project Manual Appendix C - Schedule for Review of Grade Separation Projects.

C. See Paragraph 13 - DESIGN CRITERIA & GUIDELINES FOR MAIN TRACKS AND DETOURS IN CONNECTION WITH UNDERPASS GRADE SEPARATION for information to be shown on the track plans.

D. The plans shall show dimensioned locations of all existing utilities, as well as the location of all proposed utilities, within the Railroad's right-of-way. The plans shall define the responsibility for locating, marking or installing and protecting such utilities.

E. If fiber-optic cables are presently buried on the Railroad right-of-way, or if such installations are scheduled, the presence of such facilities shall be considered in the project design and appropriate measures for the installation and protection of the fiber-optic cables shall be addressed on the plans in the contract documents.

F. Final Railroad acceptance is contingent upon receipt of project as-built plans. Project Sponsor is responsible for the submittal of project as-builds. As-built plans shall be provided in electronic format.

H.3 - NORFOLK SOUTHERN CORPORATION GUIDELINES FOR UNDER TRACK CULVERTS

1. Except as otherwise specified hereafter, the current AREMA Chapter 1, part 4 applies to all work under this section.

2. This Section is for under track culverts conveying storm water run-off only. Closed pipeline systems for roadway stormwater management shall be designed in accordance with the NSCE-8, Section 4. A "Closed pipeline system" is defined as a system that conveys stormwater entirely across the right-of-way. If the drainage system empties onto the NS right-of-way, then the under track culvert requirements apply.

3. All culvert structures shall be designed for E-80 Live Load and based on a 100 year storm event unless otherwise approved by the NS Public Projects Engineer.

    A. Maximum headwater build up (for Q 100) for inlet control conditions shall be limited to an HW/D= 1.5 provided the roadbed fill is of sufficient height to maintain the high water elevation below the toe of ballast and the fill material is capable of resisting water infiltration for short durations. With the approval of the Engineer Structures, the HW/D limit may be adjusted for special field conditions.

4. Culverts shall be sized based on the actual drainage basin. The minimum culvert size shall be 36 inches in diameter unless otherwise approved by the Engineer Structures. The "Rational Method" shall be used for drainage areas less than 500 Acres. For drainage areas greater than 500 Acres, one of the following methods should be considered and may provide more realistic runoff estimates provided data is available.

    A. Soil Conservation Service (Unit Hydrograph Theory Method) SCS

    B. Frequency Regression Theory

    C. Seven Parameter Estimating Equation

5. Corrugated metal with various coatings, corrugations, shape, and manufacturing processes, smooth wall steel pipes and concrete, both pre-cast and cast-in-place can be considered. Plastic coated pipe requires special care to avoid damage during handling and installation.

    A. Corrugated metal, galvanized and asphalt coated circular pipes will be our basic design with variations permitted with the approval of the Engineer Structures.

        1. Aluminized Type 2 uncoated or Bituminous coated galvanized steel pipe - may be used for a PH range of 5-8. Suggested uses are runoff from non industrial rural areas.

        2. Fiber Bonded Bituminous coated pipe or Plastic coated pipe - may be used where soil and water conditions warrant such as Midwest farm fields (high concentrations of fertilizer runoff), coal fields (acidic runoff), salt water marsh areas, and in areas where high soil concentrations of heavy metals are present.

        3. Pipe Arch - may be considered for special cases where physical constraints and opening requirements warrant.

    B. Smooth Wall Casing pipe will be our basic design for culverts where jack and bore method is required due to traffic condition or fill height greater than 10 feet. Liner Plate installed by Tunneling method may be required when diameter, length, presence of rock or other unusual

site conditions exist. Refer to Table 1 - Recommended wall thickness requirements and Table 2 - Liner Plate gage tables shown on Page E.3-3.

C. Concrete pipe culverts or pre-cast concrete culverts may not be used under company owned tracks due to the potential for differential settlement and joint separation, except with the approval of the NS Public Projects Engineer. Concrete pipe culverts or pre-cast concrete culverts may be used under industry tracks where NS has no maintenance responsibilities.

D. Cast-in-place concrete structures may be used where appropriate.

E. Structural Plate pipes and pipe arches are to be used where size and conditions dictate (generally considered culverts greater than 72-inch diameter). The coating to be either bituminous coated or fiber bonded depending on soil and runoff water condition (PH range).

F. Tunnel Liner shall be used when the culvert diameter exceeds pipe sizes economically installed by the jack and bore method (culverts generally larger than 60-inch diameter). All tunnel liner pipe shall be bituminous coated and have paved inverts. Grouting of voids between the pipe and adjacent soil at regular intervals, not to exceed once daily, is required.

6. Paved inverts shall be used in corrugated metal pipes where water velocities are medium to high (above 10 f.p.s.) or the possibility of excessive wear from sand and gravel is likely.

   A. Corrugated metal culverts shall have bituminous or asphalt paved inverts where needed due to high water velocities or the possibility of excessive wear from sand and gravel is likely.

   B. Concrete or Asphalt paved inverts shall be used in structural plate, tunnel liner and pipe arches that are field assembled. If concrete is used, a minimum concrete compressive strength shall be 3000 p.s.i. after 28 days. The bottom 25% of culvert periphery shall be covered with concrete (or asphalt) to a depth of 1 inch above the crest of the corrugations for circular pipes and 40% of the periphery for pipe arches. The concrete pavement shall be reinforced with 6 x 6 (W2.9 x W2.9) welded wire fabric. This wire shall be attached to the pipe by either directly welding to the pipe or by mechanical attachment to the bolts.

7. Preformed bituminous coated end sections may be used in place of headwalls when erosion at the inlet is expected. Minimum end section gage shall be 12 gage. Headwalls and/or End Sections should be considered on both ends of all culverts greater than or equal to 60-inch diameter.

TABLE 1 -SMOOTH WALL CASING PIPE MINIMUM WALL THICKNESS
(REVISED 1/17/91)

Nominal Size	Minimum Wall Thickness
(Inches)	(Inches)
24	0.500
30	0.500
36	0.500
42	0.625
48	0.625
54	0.750
60	0.875
66	0.875
72	1.00

TABLE 2 - MINIMUM LINER PLATE GAGE TABLE
(REVISED 7/10/91)

Diameter (feet)	2 Flange		4 Flange	
	Gage	Cover (feet)	Gage	Cover (feet)
4	12	4 to 50	12	4 to 50
5	12	4 to 50	12	4 to 50
6	12	4 to 50	10	4 to 50
7	12	6 to 50	10	4 to 50
7	10	4 to 50	--	--
8	10	4 to 50	8	6 to 50
9	10	4 to 50	8	8 to 50
10	8	4 to 32	5	8 to 50
10	7	34 to 50	--	--

Notes: The above Minimum Liner Plate Gage Table was developed using 1989 AREMA Specifications Chapter 1, Part 4.

The following factors of safety were used:

Joint Strength = 3.0
Minimum Stiffness = ("3.0" for 2-Flange and "1.5" for 4-Flange)
Critical buckling = 2.0.

The effects of high corrosive environments may be compensated for by adding one (1) gage to the above Liner Plate Gage Table values.

H.4 - NORFOLK SOUTHERN DESIGN SPECIFICATIONS

DISCLAIMER: The Specifications listed below and included in this section are for reference only and are subject to change at any time. The Sponsor and/or their Designer shall contact the appropriate Norfolk Southern Public Projects Engineer for the current specification version.

H.4.1. Specifications for Steel
H.4.2. Specifications for Cast-in-Place Concrete
H.4.3. Specifications for Membrane Waterproofing
H.4.4. Specifications for Painting Shop Fabricated Bridge Steel
H.4.5. Specifications for Field Painting of Bridges
H.4.6. Specifications for Installation of Under Track Culverts by Open Cut Method
H.4.7. Specifications for Installation of Under Track Culverts by the Jack and Bore Method
H.4.8. Specifications for Installation of Under Track Culverts by the Tunneling Method

H.4.1 - SPECIFICATIONS FOR STRUCTURAL STEEL

1. SCOPE

   A. These specifications shall cover the furnishing, fabrication, preparation, assembly, welding, painting, and erection of all structural steel shown on the plans.

2. GENERAL SPECIFICATIONS

   A. Except as otherwise specified hereinafter, the current AREMA Specifications, Chapter 15, Steel Structures, apply to all work.

3. STRUCTURAL STEEL

   A. Fracture Critical Members

      1. All fracture critical members are identified on the plans.

      2. All fracture critical members will be fabricated in accordance with the Fracture Control Plan stated in the AREMA Specifications, Chapter 15, Section 1.14.

      3. Fabricator shall be certified under the AISC Quality Certification Program as follows:

         a. For Welded Plate Girders: Major Steel Bridge Category
         b. For Rolled Beam Bridges: Simple Steel Bridge Structures Category

      4. Except as noted in the AREMA Fracture Control Plan, structural steel shall meet the current requirements of the ASTM Specifications for Structural Steel, Designation A-709, Grade 50 and the following supplementary requirements:

         a. S5-F2 (Fracture Critical - Charpy Test Zone 2)
         b. S29 (Fine Austenitic Grain Size)
         c. S93 (Limitation on Weld Repairs)

   B. Non-Fracture Critical Members

      1. All primary members or components requiring improved notch toughness are identified on the plans.

      2. Fabricator shall be certified under the AISC Quality Certification Program as follows:

         a. For Welded Plate Girders: Major Steel Bridge Category
         b. For Rolled Beam Bridges: Simple Steel Bridge Structures Category

      3. Structural steel shapes and plates used as primary members or components shall meet the current requirements of the ASTM Specifications for Structural Steel, Designation A-709(Grade 50), and the following supplementary requirements:

         a. S5-T2 (Non-Fracture Critical - Charpy Test Zone 2)
         b. S29 (Fine Austenitic Grain Size)

C. Other Structural Steel

1. The Fabricator shall be certified under the AISC Quality Certification Program, Simple Steel Bridge Structures Category.

2. All structural steel shapes shall meet the current requirements of ASTM A992 or A36 as applicable, unless specified otherwise in these specifications or on the plans.

3. All Steel plate shall meet the current requirements of A572, Grade 50.

4. OTHER MATERIALS

A. High strength bolts shall meet the current requirements of the ASTM Specifications for High Strength Bolts for Structural Steel Joints, Designation A 325.

B. Anchor rods shall be threaded rods with heavy hex nut meeting the current requirements of ASTM F1554.

C. Welding electrodes for arc welding shall meet the current requirements of the Specifications for mild steel arc-welding electrodes Series E70, AWS 5.1, Low Hydrogen Classification for SMAW and AWS 5.17 for SAW.

D. Preformed fabric bearing pads shall be Shock Pad Style No. l5l75 as manufactured by Alert Manufacturing and Supply Company, Chicago, Illinois, or FABREEKA Pads as manufactured by Fabreeka Products Company, ll90 Adams Street, Boston, Massachusetts, or SORBTEX Pads as manufactured by Voss Engineering, Inc., Chicago, Illinois, or approved equal.

5. WELDING PROCESSES

A. Submerged arc welding (SAW) or shielded metal arc welding (SMAW) may be used for girder (flange to web) fabrication.

6. BOLTED CONNECTIONS

A. Permanent bolted connections using High Strength Bolts shall be installed and tightened using the Turn-of-the-Nut Method.

B. Tension Control Bolts are not permitted.

7. PAINT

A. All steel preparation and painting shall be in accordance with Norfolk Southern Paint Specifications. Refer to Norfolk Southern's Public Projects Manual Appendix H.4.4.

8. SHOP DRAWINGS

A. The Contractor's attention is called to the requirements for shop drawings, Chapter 15, Part 1 Article 1.1.3 Shop Drawings, AREMA Specifications.

B. The Contractor shall furnish an electronic set in PDF format of detailed shop drawings to the Railroad for approval prior to starting fabrication. Unchecked drawings shall not be submitted

for approval. After approval of shop drawings, the Contractor shall supply the Railroad with one electronic set of the approved fabrication drawings.

C. The rejection of or the procedure for the correction of shop drawings will not be considered as cause for delay.

D. Approval by the Engineer of the shop drawings shall not relieve the Contractor from furnishing material of proper dimensions, quantity, and quality, nor will such approval relieve the Contractor from the responsibility for errors of any sort in the shop drawings.

E. Original drawings in PDF format shall be furnished at the completion of the Contract in accordance with Chapter 15, Article 1.1.3, AREMA specifications.

9. SHOP INSPECTION & TESTING

A. The Railroad may arrange for inspection by an independent inspection firm under a separate contract. This inspection will be in addition to the Fabricator's Quality Control Program.

B. The Fabricator shall notify the Railroad and its inspector of the scheduled date for beginning fabrication and shall not begin fabrication until the Railroad's Inspector is present.

C. The Fabricator shall furnish copies of certified mill inspection reports to the Railroad for all structural steel requiring improved notch toughness.

D. The Fabricator shall meet the requirements of the AREMA Fracture Control Plan described in Chapter 15, Part 1, Article 1.14 for all members and components designated as fracture critical.

E. Welding Inspection shall verify that all welds and welding procedures meet the requirements of the current American Welding Society (A.W.S.) Bridge Welding Code, D1.5.

F. All welds shall be inspected visually and by use of nondestructive testing. All nondestructive testing shall be performed by the Fabricator and witnessed by the Railroad's Inspector.

G. Witnessing of weld inspection shall be done in a timely manner without disruption of normal shop operations. Copies of all weld inspections and nondestructive testing reports shall be furnished to the Railroad.

H. The Fabricator shall perform the following weld inspection and testing:

1. All transverse tension groove welds in FCM members, when allowed by the Engineer, shall be RT and UT tested 100% In non-FCM components of FCM's all transverse groove welds shall be RT or UT tested 100%.

2. All flange to web welds shall be tested on both sides in accordance with American Welding Society (A.W.S.) Bridge Welding Code, D1.5/2013, Clause 6.7.

3. All flange to web fillet welds, when allowed by the Engineer, are to be magnetic particle tested 100%.

4. Ten percent (10%) of all welds not mentioned above shall be magnetic particle tested.

END OF SPECIFICATION

H.4.2 - SPECIFICATIONS FOR CAST-IN-PLACE CONCRETE

1. SCOPE

   A. These specifications cover all cast-in-place concrete required for completion of the project.

2. GENERAL

   A. Except as otherwise specified hereafter, the current American Railway Engineering Association and Maintenance-of-way association (AREMA) Manual for Railway Engineering (Recommended Practice), Chapter 8 - Concrete Structures and Foundations, shall apply to all work under this section.

3. STRENGTH, PROPORTIONS AND MIXES

   A. Cement, unless otherwise specified, shall conform to the following:

      1. Standard Concrete: Cement shall be Portland Cement, Type I or Type IA, conforming to the requirements of ASTM Designation C150.

      2. High Early Strength Concrete: Cement shall be Type III, or Type IIIA, conforming to the requirements of ASTM Designation C150.

   B. Minimum compressive strength at 28 days shall be 4000 PSI, unless a higher compressive strength is indicated on the plans.

   C. Minimum cement content shall be 6.50 Bags/CY (610 LBS/CY).

   D. Fly Ash, Silicafume and/or slag cement and any other admixtures, approved by the Engineer, shall be in addition to the minimum cement content indicated above, not in lieu of cement.

   E. Nominal size of coarse aggregate shall be 1" - No. 4 (Size 57).

   F. Concrete shall be air-entrained by the use of an air entraining admixture conforming to requirements of ASTM Designation, C260, or by the use of air-entraining Portland cement meeting the requirements of ASTM Specification C150. The concrete shall have an air content between 4.0% and 6.0%.

   G. Admixtures, except air-entraining agents, used to alter the normal properties of concrete for densifying, dispersing, retarding, accelerating, plasticizing, coloring, or waterproofing, shall be used only upon written permission of the Engineer.

   H. Testing: Compression tests and field tests will be required as specified in the AREMA Manual, Chapter 8, Part 1. The Contractor shall furnish all test materials and test cylinder molds, shall perform all work to make and cure the test cylinders, and after proper curing, shall deliver the test cylinders to an independent testing laboratory where they shall be tested at the Contractor's expense. The test results shall be furnished directly to the Engineer in writing, by the testing laboratory, on a standard testing report form. Not less than four test cylinders shall be made for each twenty cubic yards, or fraction thereof, of cast-in-place concrete. One pair of cylinders shall be tested at 7 days and the second pair at 28 days.

I. Slump range shall be two to four inches prior to the addition of high range water reducing admixtures at the site. Pumped concrete should have a slump range of 5” to 6” prior to pumping. At least one slump test shall be made for each truckload of concrete delivered to the project for inclusion in the work. A record of the amount of slump shall be made and furnished to the Engineer.

4. REINFORCING STEEL

A. Reinforcing steel bars shall be intermediate grade, new billet steel, conforming to ASTM Designation A615, Grade 60. Reinforcing bars shall be bent cold in the shop or in the field around a pin not less than 6 times the diameter of the bar. Reinforcing partially embedded in concrete or in mortar in dowel holes shall not be field bent, except as permitted by the Engineer.

B. Welded wire mesh shall conform to ASTM Designations A82 and A185.

C. Epoxy coated reinforcing bars, where specified or shown on the Plans, shall conform to ASTM A775, "Standard Specification for Epoxy-Coated Reinforcing Bars". Epoxy coated reinforcing bars shall be tied with plastic or epoxy coated wires or approved plastic clips, and shall be set on plastic or epoxy coated wire chairs.

5. INTERFACING WITH EXISTING CONCRETE

A. Surface preparation and anchorage shall be as specified in AREMA Specifications, Chapter 8, Part 14, unless otherwise indicated on the Plans. Dowels shall be made of deformed bars, ASTM A615, Grade 60, and shall be spaced as shown on the Plans. Dowels shall be grouted in place with an Epoxy Grout intended for dowel bars, and shall be applied in accordance with ASTM C881 and the manufacturer’s recommendations. Horizontal dowel holes shall be drilled downward on a slope of approximately one inch per foot or as otherwise indicated on the Plans.

B. The surface of the existing material to which the new concrete will be bonded shall be cleaned by either sandblasting, waterblasting, hammers or wire brushes, so that all foreign material and loose or unsound concrete is removed and that a clean sound surface remains. The exposed surface shall be washed with clean water or air cleaned with oil free air to remove all loose dust. Grease and oil shall be scrubbed and removed with a detergent and the surface washed with clean potable water.

C. New concrete shall be bonded to clean sound material with an Epoxy Bonding Compound. Bonding System shall meet the requirements of ASTM C881, Type II Grade 1 or 2, and shall be subject to approval by the Engineer. Bonding System shall be applied in accordance with manufacturer's recommendations. It is further recommended that Bonding Compound be applied as a spray application by use of a Binks bottom discharge pressure vessel operating at approximately 100 psi. Bonding Compound shall not be applied to surfaces that have visible or standing water.

6. DAMPPROOFING

A. All surfaces of concrete masonry which will be in contact with backfill or embankment shall be dampproofed, with Asphalt Primer and Asphalt, in accordance with AREMA Specifications, Chapter 8, Part 29.

7. CONSTRUCTION JOINTS

   A. Construction joints shall be made only where shown on the Plans, unless otherwise approved by the Engineer, and shall be adequately keyed and, if required by the Engineer, be provided with 6"x3/8" polyvinyl-chloride waterstops.

8. FORMED SURFACE FINISH

   A. All unformed surfaces shall be constructed to lines and contours shown on the drawings with a wood or hard rubber float finish. Formed surfaces shall be made with plywood faced wood forms or with steel faced forms.

9. CURING

   A. Concrete shall be protected as required by AREMA Specification, Chapter 8, Section 1.17, for a minimum of 7 days. Membrane curing compounds are permitted, on all cast-in-place concrete surfaces except those that will abut other new concrete. Curing of such abutting surfaces shall be by wet curing methods. Membrane curing shall be compatible with the specified Concrete Surface Sealer, or the membrane curing compound shall be removed to promote adhesion of the sealer to the concrete.

10. BEARING PADS

   A. Bearing pads shall be used whenever steel Masonry Plate, or other steel bearing plate, bears on concrete. Pads shall be preformed fabric bearing pads, 1/2" thick, and shall be either Shock Pad Style 15175, as manufactured by the Alert Manufacturing and Supply Company, Chicago, IL; or Fabreeka Pads, as manufactured by the Fabreeka Products Company, Boston, MA; or SORBTEX Pads as manufactured by Voss Engineering, Inc., Chicago, Illinois; or an approved equal.

END OF SPECIFICATION

H.4.3 - SPECIFICATIONS FOR MEMBRANE WATERPROOFING

1. SCOPE

   A. These specifications cover the furnishing and installing of all materials for the waterproofing of the steel, or concrete, ballast deck with a butyl rubber membrane waterproofing system. Included under this item are the rubber-base bonding adhesive, butyl rubber sheeting, asphalt mop coat, asphaltic panel protective cover, and all miscellaneous work and materials required to complete the waterproofing system as shown on the plans and as specified herein or as directed by the Engineer.

2. OTHER SPECIFICATIONS

   A. The following specifications are referred to in this document.

      1. American Railway Engineering and Maintenance of Way Association, Manual for Railway Engineering (AREMA)

      2. American Society for Testing and Materials, Annual Book of Standards (ASTM)

3. MATERIALS

   A. The butyl rubber sheeting, rubber membrane splicing cement, butyl gum splicing tape and asphaltic panel protective cover shall be in accordance with the requirements for Membrane Waterproofing as specified in AREMA, Chapter 8, Part 29, except as noted on the plans or in these specifications.

   B. The butyl rubber sheeting shall not be less than 3/32" thick, and shall be furnished in sheets as large as feasible to keep the number of field splices to a minimum.

   C. Rubber-base bonding adhesive for securing butyl rubber membrane shall be compatible with the membrane and with the steel plate to which it is bonded. It shall remain workable to its brittle point (minus 40 degrees F.). It shall be applied in accordance with the manufacturer's directions and shall conform to the following requirements:

      1. Viscosity 2,000 – 2,500 CPS
      2. Total Solids 32 – 35%
      3. Base Synthetic Rubber
      4. Color Transparent

   D. Samples of the sheeting and adhesive, and evidence that sheeting and adhesive meet the required physical and resistance requirements, shall be submitted to the Engineer for approval. Approval of the Engineer shall be obtained before the material is installed.

   E. Field splices shall be of the tongue and groove type. The grooves shall be formed by heat vulcanizing a supplemental piece to the sheeting in the factory. The field splices shall be made by using butyl gum tape at the upper and lower contact surfaces of the splice and cementing the parts of the joint together with approved cement. Samples of the joint, tape and cement shall be submitted to the Engineer for approval.

   F. The sealing compound for sealing unavoidable gaps between asphaltic panels shall be compatible with materials containing bitumens and any other materials in contact with it.

The type of sealing compound, with evidence of compatibility, shall be submitted to the Engineer for approval.

G. The asphalt mop coat shall conform to the Requirements of ASTM D-449, Type 2.

4. SHOP DRAWINGS

A. The Contractor shall prepare shop drawings showing dimensions, locations of field splices, details of field splices, and other essential information.

B. Contractor shall an electronic set in PDF format of detailed shop drawings to the Railroad for approval. Unchecked drawings shall not be submitted for approval. After approval of shop drawings, the Contractor shall supply the Railroad with one set in electronic format of the approved fabrication drawings

5. INSTALLATION

A. The butyl rubber membrane shall be installed in Accordance with the requirements of AREMA, Chapter 8, Part 29 – Article 14.1, except as noted on the plans or in these specifications.

B. Immediately prior to the application of the waterproofing, all areas of the floor plate and ballast plates to be covered with the membrane shall be cleaned to the satisfaction of the Engineer.

C. The component parts of the membrane shall be applied in the following order:

1. A coating of rubber-base bonding adhesive to area specified herein.
2. Butyl rubber sheeting.
3. A coating of rubber-base bonding adhesive to areas specified herein.
4. Asphaltic panels.
5. A mop coat of asphalt.

D. Butyl rubber membrane shall not be applied when the atmospheric temperature is below 40 degrees F., without written permission of the Engineer. Surfaces to be waterproofed shall be clean, smooth, dry and free of fins, sharp edges, oil, grease and loose or foreign materials. Projections or depressions on the surface on which the membrane is to the applied, that may cause injury to the membrane, shall be filled or removed as directed by the Engineer. Rubber-base bonding adhesive for securing the membrane to the deck shall be applied to a one-foot wide horizontal strip of floor plate at the base of ballast guards and a two-foot wide strip of floor plate at the abutments. Horizontal surfaces of the steel floor plates, except as noted above, shall not be coated with adhesive. The rubber-base bonding adhesive shall be applied to the surfaces described above in a uniform continuous coating at a rate not less than one gallon per 60 square feet of surface. The butyl rubber sheeting shall be positioned, drawn tight without stretching, pressed firmly and uniformly in place against the previously applied adhesive. Care shall be used in placing the sheets and in making field splices so they will lie flat without air bubbles or wrinkles. Each seceding sheet shall be positioned to fit the previously installed sheet and spliced.

E. All splice areas shall be carefully cleaned with Heptane, Hexane, Toluene, Trichlorethylene or white gasoline, using a clean cloth, mop or similar synthetic cleaning device. Cement shall be spread continuously on splice areas at a uniform rate of not less than two gallons per 100 square feet. After the cement is allowed to dry until it will not stick to a dry finger touch, apply butyl gum tape to cemented areas of membrane, extending at least 1/8” beyond the edges of

the splice areas. Roll or press the tape firmly into place, obtaining full contact. Corner splices shall be reinforced with two continuous layers of rubber membrane. Any holes in the sheeting shall be patched with a minimum overlap of four inches. Butyl gum tape shall be used between layers of rubber membrane.

F. During the progress of the work, care shall be exercised to prevent injury to the waterproofing membrane by the passage of men and equipment. As soon as practicable after the membrane waterproofing has been placed, it shall be protected from damage by the installation of the asphaltic panel protective cover.

G. The thickness of each asphaltic panel shall not be less than ½", and the width not less than four feet. The asphaltic panels shall be laid in accordance with AREMA, Chapter 8, Part 29 – Article 14.4, except as noted on the plans or in these specifications. Panels shall be installed in two layers with joints staggered on the half sheet module, and shall be carefully placed to ensure tight proximity to adjacent members. No adhesive shall be used in the installation of the panels. After placing the second layer, unavoidable gaps shall be filled with a compatible sealing compound and the entire top surface of the asphaltic panels shall be given a mop coat of hot asphalt to completely fill the joints between the panels.

6. ALTERNATE APPLICATION

A. A variance request must be submitted and approved by the engineer to use a Cold Applied Deck Waterproofing Membrane System. Approval of an alternate system must be in accordance with the following items:

1. Top surface of the deck or deck plates and side walls or side plates are to be protected with a Cold Spray Membrane Waterproofing System as Manufactured by:

    1. BRIDGE DECK MEMBRANE BY BRIDGE PRESERVATION, 87 SHAWNEE AVE., KANSAS CITY, KS 66105, TEL: (913) 321-9000

    2. ELIMINATOR BY STERLING LLOYD PRODUCTS, INC., 152 ROCKWELL ROAD, BUILDING A, NEWINGTON, CT 06111 . USA, TEL: 860 666 5008

2. Surfaces that receive sprayed waterproofing membrane shall be thoroughly cleaned as per SSPC-SP10.

3. The Minimum thickness for the finish coat shall not be less than 120DFT.

4. Spray Application shall be certified by the manufacturer with a copy submitted to the engineer for approval.

5. Waterproofing membrane shall be applied in the shop (or in the field) by the fabricator (or contractor)

6. Steel Fabricators shall install the balance of the deck waterproofing in the field upon completion of field welding or bolting as coordinate by the contractor.

END OF SPECIFICATION

H.4.4 - SPECIFICATIONS FOR PAINTING SHOP FABRICATED BRIDGE STEEL

1. GENERAL

   A. Plans and Specifications

      1. This work consists of furnishing all labor, material, plant and equipment, and performing all operations in connection with Shop Painting (prime coat, wash coat, and Finish coat applied in the fabricators plant or unless otherwise specified by the Railway). All painting shall be in accordance with AREMA Specifications, Chapter 15 - Section 3.4, and Society of Protective Coatings Specifications with the following specific requirements.

      2. The paint thickness will be measured according to "SSPC-PA2" Method for Measurement of Dry Paint Thickness with Magnetic Gages.

   B. Surface Preparation

      1. The surface preparation shall be in accordance with Society of Protective Coatings Specifications SP 10 (NEAR WHITE BLAST) latest revision and Visual Standard NACE No. 2. Average surface profile to be 2 mils.

      2. Application - The paint shall be applied in accordance with SSPC Specifications for Paint Application - PA1.

      3. The Prime Coat shall be applied in the shop promptly after blast cleaning, but in no case shall the prime coat be applied more than 8 hours after blast cleaning or after visible or detrimental rusting occurs.

      4. Steel shall be cleaned by washing, or other mechanical means to remove all residue (loose zinc dust and foreign matter) prior to applying Wash and Finish Coat.

      5. Surfaces damaged during shipment and handling shall be repaired using the same paint system as applied in the shop except that the Prime coat shall be repaired using an Organic Zinc Primer when the Primer Coat is repaired in the field.

   C. Welded Areas and Faying (Contact) Surfaces

      1. No paint shall be applied to areas to be welded in the field. No Vinyl paint (wash or Finish coat) shall be applied to any faying surfaces.

2. PAINTING REQUIREMENTS

   A. Paint System

      1. The fabricator will be given the option of using one of the following paint systems (Prime Coat, Intermediate and Finish Coats shall be applied in the fabricator's plant unless otherwise specified by the Railway). If the Intermediate Coat and Finish Coat are applied in the field, the steel shall be solvent wiped to removed all grease and oil and a "High Pressure Power Washing" with clean water (3500 psi minimum) shall be used to clean all mud and dirt off prior to applying the touch-up Primer or Intermediate and Finish Coats. The fabricator shall supply sufficient quantities of touch-up Organic Zinc-Rich Primer, Intermediate Coat, Finish Coat and Thinner. The Railroad is to be notified of

the fabricator's choice. Priming of the contact surfaces with Inorganic Zinc-Rich primer is required.

2. If approved or further specified by the Railway, the Wash Coat and Finish Coat shall be applied in the shop.

B. Approved Paint Systems

1. System #1 (ELITE)

a. Prime Coat: Elite 1312 Inorganic Zinc Rich Primer applied at 4.0 - 5.0 mils Dry Film Thickness.

b. Intermediate Coat - Elite 156 Exterior Acrylic Latex (White) applied at 3.0 - 4.0 mils Dry Film Thickness.

c. Finish Coat - Elite 156 Exterior Acrylic Latex (Gray) applied at 3.0 - 4.0 mils Dry Film Thickness.

d. Touch Up Primer - Elite 305 Organic Zinc-Rich Primer applied at 4.0 - 5.0 mils Dry Film Thickness.

e. Suggested Supplier:
Elite Coatings Company, Inc.
P.O. Box 130
Gordon, GA 31031
Telephone: (912) 628-2111

2. System #2 (DEVOE)

a. Prime Coat: Catha-Coat 302HB Reinforced Inorganic Zinc-Rich Primer applied at 3.0 - 4.0 mils Dry Film Thickness.

b. Intermediate Coat: Bar-Rust 235 Multi-Purpose Epoxy Coating (White) applied at 4.0 - 8.0 mils Dry Film Thickness.

c. Finish Coat: Devthane 379UVA Aliphatic Urethane Gloss Enamel (Gray) applied at 2.0 - 3.0 mils Dry Film Thickness.

d. Touch Up Primer - Catha-Coat 302HB Reinforced Inorganic Zinc-Rich Primer applied at 3.0 - 4.0 mils Dry Film Thickness.

e. Suggested Supplier:
Devoe Coatings Company
320 Westbrook Drive
Butler, PA 16001
Telephone: (724) 283-1471

3. System #3 (SHERWIN-WILLIAMS)

    a. Prime Coat: ZINC CLAD II Plus - (B69VZ1 B69VZ13 B69D11)Inorganic Zinc-Rich Primer applied at 2.0 - 4.0 mils Dry Film Thickness.

    b. Intermediate Coat - B66 Series DTM ACRYLIC GLOSS (White) applied at 3.0 - 4.0 mils Dry Film Thickness.

    c. Finish Coat - B66 Series DTM ACRYLIC GLOSS (Gray) applied at 3.0 - 4.0 mils Dry Film Thickness.

    d. Touch Up Primer - ZINC-CLAD IV - (B69 A8/B69 V8) applied at 4.0 - 5.0 mils Dry Film Thickness.

    e. Suggested Supplier:
    The Sherwin-Williams Company
    765 North Avenue, NE
    Atlanta, GA 30306
    Telephone: (404) 873-6723

4. System #4 (AMERON)

    a. Prime Coat: Amercoat 21-5 Inorganic Zinc-Rich primer applied at 4.0 - 5.0 mils Dry Film Thickness.

    b. Intermediate Coat - Amercoat 148 Waterborne Acrylic primer applied at 3.0 - 4.0 mils Dry Film Thickness.

    c. Finish Coat - Amercoat 220 Waterborne Acrylic (Gray) applied at 3.0 - 4.0 mils Dry Film Thickness.

    d. Touch Up Primer - Amercoat 68HS Zinc-Rich Primer applied at 4.0 - 5.0 mils Dry Film Thickness.

    e. Suggested Supplier:
    Ameron Protective Coatings Division
    11605 Vimy Ridge Road
    Little Rock, AR 72209
    Telephone: (800) 283-6627

C. Post Painting Requirments

1. Steel shall be cleaned by washing, or other mechanical means to remove all residue (loose zinc dust and foreign matter) prior to applying Wash and Finish Coat. An "M.E.K. Rub Test" shall be used to assure proper cure of the inorganic zinc primer prior to applying the next coat.

2. The Intermediate Coat may have to be thinned to prevent gassing.

3. PAINTING MATERIALS REQUIREMENTS

A. Packaging and Shipping

1. All paint shall be received at the point of use in original containers and carefully stored. All paint to be used shall be freshly mixed and shall be ordered only a sufficient length of time in advance of its use to insure an adequate supply being on hand at all times so as not to delay the work.

2. Paint shipped to the job shall arrive in sealed containers clearly marked with the type of paint and specifications controlling its manufacture.

3. There shall be no modification of the paint except upon, and in accordance with, express written stipulation by an authorized representative of the paint manufacturer and with specific approval of the Engineer.

B. Storage

1. Paint in storage at the shop or in the field shall have the position of the containers reversed at least once a week to prevent settlement and separation of the pigment from the vehicle. There shall be suitable devices maintained at the point of storage and used for agitation and thorough mixing of the paint prior to its use on this work.

C. Sample Panel

1. If directed by the Engineer, a sample panel shall be made up. The panel shall be used as a basis of comparison of the work on this contract. The panel shall be of size designated by the Engineer and shall be prepared and painted in all respects in the same manner as the work will be done.

4. WORKMANSHIP

A. Weather Conditions

1. Paint shall not be applied when the temperature of the air is less than 40 degrees F., when the surface of the metal is not dry, the relative humidity is above 85%, or when, in the opinion of the Engineer, conditions are otherwise unsatisfactory for such work. Paint shall not be applied upon damp, or frosted surfaces. Material painted under cover in damp or cold weather shall remain under cover until dry or until weather conditions permit its exposure in the open. Painting shall not be done when the metal is hot enough to cause the paint to blister and produce a porous paint film.

B. Application

1. Paint shall be applied in accordance with SSPC Specifications for Paint Application - PA1 and in accordance with manufacturer's recommendation.

2. All blast cleaned steel surfaces shall be primed before completion of the workday.

3. Steel shall be cleaned by washing, brushing or other mechanical means of all residue (loose foreign matter) prior to applying the finish coat.

C. Removal of Unsatisfactory Paint

1. If the Prime Coat "mud-cracks", the Finish Coat wrinkles or shows evidence of having been applied under unfavorable conditions or if the workmanship is poor, the Engineer may order it removed and the metal thoroughly cleaned and repainted. Any "Blushing" of the Finish Coat shall be corrected by solvent wiping and/or re-coating before final acceptance by the Company.

D. Thinning

1. No thinner shall be used if the paint can be applied in a neat workmanlike manner without thinning. If the paint is too thick to spray, only the manufacturer's specified thinner (in hot weather vinyl paint shall be thinned with M.I.B.K. to reduce the chances of "Blushing" occurring) may be added to the paint up to 25% by volume or as otherwise specified by the manufacturer. Thinning shall not relieve the contractor from applying the specified coating D.F.T.

E. Paint Touch-up

1. After erection, all damaged areas shall be cleaned of mud and dirt by High Pressure Power Washing with clean water (3500 psi minimum); grease, and oil by solvent wiping; and rusted areas shall be cleaned by sand blasting or power tool cleaning with non-woven abrasives prior to touch-up or Finish coating. The paint used for touch-up shall be the same system used in the shop. The Contractor and/or Fabricator shall be responsible for cleaning all damaged surfaces and applying all field touch-up coatings in accordance with all manufacturer's recommendations. The Zinc Primer shall be touched up with only Organic Zinc Primer when applied in the field.

F. Warranty

1. The Fabricator and or Contractor will be required to guarantee his work against defective workmanship or the use of defective materials for a period of one (1) year from the completion of the contract.

G. Handling Shop Primed Steel

1. Only Nylon web slings or padded lifting points shall be used to move shop primed steel to prevent damage to the coating.

5. ENVIRONMENTAL PROTECTION REQUIREMENTS

A. Air Quality Requirements

1. Abrasive blasting operations shall be conducted in full compliance with all current national primary and secondary ambient air quality standards 40 CFR 50 (for Particulate matter - 40 CFR 50.6; Lead - 40 CFR 50.12; and nuisance dust). Abrasive blasting operations shall also be compliant with any and all local and state air quality requirements.

6. ENVIRONMENTAL PROTECTION STATEMENT

   A. "All collection, containment, disposal and transportation for disposal must be compliant with all applicable State, Federal and Local air pollution, water pollution, solid waste and hazardous waste regulations, ordinances or statutes."

END OF SPECIFICATION

H.4.5 - SPECIFICATIONS FOR FIELD PAINTING OF BRIDGES

1 GENERAL

1.1 Plans and Specifications

1.1.1 All work shall be performed in accordance with this Specification and any accompanying plan drawings and special instructions.

1.1.2 All work shall be performed in accordance with the guidelines and specifications of the Society for Protective Coatings (SSPC) and the American Railway Engineering and Maintenance of Way Association (AREMA), in addition to the requirements contained herein.

1.2 Permits and Agreements

1.2.1 The Contractor employed by THE _____ shall be responsible for obtaining all permits and agreements necessary to perform the work specified herein. The Contractor shall determine what is required of him by such permits and agreements.

1.3 Cleaning and Painting System Option

1.3.1 The _____ may elect to paint the steel surfaces with only minimal surface preparation, as an alternative to commercial blast cleaning. With this option, the Contractor will furnish the following three-coat ICI Devoe® High Performance Coatings system:

a. Pre-Prime™ 167 Penetrating Sealer prime coast applied at 1.5 mils DFT and having amber clear color with medium sheen finish.

b. Bar-Rust™ 235 Multi-Purpose Epoxy intermediate coat applied at 4.0-8.0 mils DFT and having off white color with semi-gloss finish.

c. Devthane® 379UVA Aliphatic Urethane Gloss Enamel top coat applied at 2.0-3.0 mils DFT and having gray color with gloss finish.

1.3.2 So as to help achieve a more enduring appearance enhancement, the _____ may elect to blast clean the steel surfaces prior to painting. With this option, the Contractor will furnish the following three-coat ICI Devoe system:

a. Catha-Coat® 303H Zinc Rich Epoxy Primer prime coat applied at 2.0 to 4.0 mils DFT and having green color with flat finish.

b. Devran® 201 Universal Epoxy Primer intermediate coat applied at 2.0 to 3.0 mils DFT and having light gray color with flat finish.

c. Devflex™ 659 Gloss DTM Waterborne Acrylic Enamel top coat applied at 2.0 to 4.0 mils DFT and having gray color with gloss finish.

1.3.3 With either paint option, the finish coat is to be gray in color, closely matching Identification No. 26306 per Federal Standard 595B.

1.3.4 At its discretion the Railway may recommend an equivalent paint system from a manufacturer other than ICI Devoe.

1.4 Coordination of Work

1.4.1 The Contractor shall coordinate his work through the office of Norfolk Southern's Assistant Division Engineer of Bridges _____, or his designee, herein referred to the Engineer.

1.5 Contractor's Plant

1.5.1 The Contractor may occupy any unused location within the area controlled by the Railway, subject to the approval of the Engineer. The Contractor shall submit a plan of his plant layout to the Engineer for approval prior to beginning work.

1.5.2 If the Contractor desires to use additional area outside that controlled by the Railway, he shall arrange for such use at his own expense.

1.6 Materials

1.6.1 The Contractor shall furnish all materials required to perform the work specified herein.

2 SURFACE PREPARATION AND CLEANING

2.1 Blast Cleaning Option

2.1.1 Surface preparation shall be in accordance with the current revision of SSPC-SP 6/NACE No. 3, "Commercial Blast Cleaning." As an alternate method, SSPC-SP 3, "Power Tool Cleaning," may be used. The average surface profile shall be two (2) mils.

2.1.2 Adherent mill scale, herein defined as mill scale that cannot be lifted with a dull putty knife, will be allowed to remain on the steel after blasting. Special attention shall be given to interior corners and crevices and to areas surrounding rivet heads, nuts, and bolts so as to ensure the removal of heavy encrustations of rust.

2.1.3 Blastox®-blended abrasive shall be used to produce the SSPC-SP 6 blast-cleaned surface on any steel surface having a lead-based coating. Blastox® is manufactured by The TDJ Group, Inc., 760-A Industrial Drive, Cary, Illinois 60013.

2.1.4 The Contractor shall conduct a test blast with the Blastox®-blended abrasive and shall submit a representative sample of the waste material to a state-certified laboratory for Toxicity Characteristic Leachate Procedure (TCLP) metals testing. A separate TCLP test shall be performed for every fifty (50) tons of waste material generated. Copies of all test results shall be submitted to the Engineer in a timely manner.

2.1.5 Prior to beginning work, the Contractor shall submit a plan outlining (a) the cleanup of spills resulting from failure of the waste material containment system, (b) the means of identifying failure of the containment system or other such incident, and (c) the method of collecting and storing waste material.

2.1.6 Spent abrasive and paint waste must not be allowed to contact the soil. The Contractor shall collect and store the waste material in approved waste containers.

2.1.7 All waste material shall be disposed of at a licensed sanitary landfill unless the waste is determined to be hazardous. All hazardous waste shall be disposed of at an approved hazardous waste facility.

2.1.8 The Contractor must submit to the Engineer a written statement that he employs or subcontracts an individual or company knowledgeable in all state and federal laws pertaining to waste management. The statement shall include the name, address, and telephone number(s) of the knowledgeable party.

2.2 Minimal Cleaning Option

2.2.1 All surfaces must be sound, clean, dry, and free of oil, grease, mildew, form release agents, laitance, and foreign matter.

3 PAINTING

3.1 Paint Application

3.1.1 Paint shall be applied in accordance with SSPC-PA 1, "Shop, Field, and Maintenance Painting of Steel," and the Dry Film Thickness (DFT) shall be measured in accordance with SSPC-PA 2, "Measurement of Dry Coating Thickness With Magnetic Gages."

3.1.2 One (1) full prime coat shall be applied promptly after cleaning, and all blast-cleaned surfaces shall be coated before completion of the workday or before visible oxidation occurs.

3.1.3 Prior to the spray application, an initial prime coat shall be applied to all rivets and bolts with a round or oval brush.

3.1.4 Not more than twenty-four (24) hours shall elapse between the applications of the prime coat and the intermediate coat.

4 MATERIALS

4.1 Packaging and Shipping

4.1.1 Paint shall be received at the point of use in original containers and shall be carefully stored. Paint shall be freshly mixed and shall be ordered only a sufficient length of time in advance of its use to ensure an adequate supply on hand at all times during the work.

4.1.2 Paint shipped to the job site shall arrive in sealed containers clearly marked with the type of paint and specifications controlling its manufacture.

4.1.3 No modification of the paint shall be made except upon and in accord with express written stipulation by an authorized representative of the paint manufacturer and with specific approval of the Engineer.

4.2 Storage

4.2.1 Paint in storage at the shop or in the field shall have the position of the containers reversed at least once a week to prevent settlement and separation of the pigment from

the vehicle. Suitable devices shall be maintained at the point of storage and used for agitation and thorough mixing of the paint prior to its use. Paint shall be stored out of the weather and above a temperature of thirty-two (32) degrees Fahrenheit.

4.3 Sample Panel

4.3.1 If directed by the Engineer, the Contractor shall prepare a sample panel to be used as a basis of comparison of the work. The panel shall be of the size designated by the Engineer and shall be prepared and painted in the same manner as the work to be done.

5 WORKMANSHIP

5.1 Weather Conditions

5.1.1 Paint shall not be applied when the temperature of the air is less than forty (40) degrees Fahrenheit, when the surface of the metal is not dry, when the surface temperature is less than five (5) degrees above the dew point, when the relative humidity is greater than eighty-five (85) percent, or when, in the opinion of the Engineer, conditions are otherwise unsatisfactory for such work. Paint shall not be applied upon damp or frosted surfaces. Material painted under cover in damp or cold weather shall remain under cover until dry, or until weather conditions permit its exposure in the open. Painting shall not be done when the metal is hot enough to cause the paint to blister and produce a porous paint film, or when the surface temperature is greater than one hundred twenty-five (125) degrees Fahrenheit.

5.2 Removal of Unsatisfactory Paint

5.2.1 If the paint wrinkles or shows evidence of having been applied under unfavorable conditions, or if the Engineer otherwise deems the workmanship to be poor, the Engineer may order the paint removed and the area cleaned and repainted at the Contractor's expense.

5.3 Paint Thinning

5.3.1 Thinner shall not be used if the paint can be applied in a neat, workmanlike manner without thinning. If the paint is too thick to spray, only the manufacturer's specified thinner may added to the paint in accordance with the manufacturer's recommendations, and subject to the approval of the Engineer.

5.3.2 Thinning of the paint shall not relieve the Contractor from achieving the specified Dry Film Thickness.

6 ENVIRONMENTAL AND SAFETY

6.1 Air Quality Requirements

6.1.1 Abrasive blasting operations shall be conducted in full compliance with all current federal primary and secondary air quality standards (40 CFR 50) as well as all state and local air quality requirements.

6.1.2 The Contractor shall pursue an "air permit" for the work from the state and local air regulatory authorities. In the event such agency does not require permitting for the

work, the Contractor shall obtain this determination from the agency in writing. If the regulatory agency will not furnish written determination, or in the absence of state and local regulatory authorities, the Contractor shall furnish the Engineer a written discussion of his efforts to obtain an "air permit."

6.1.3 The Contractor shall ensure one hundred (100) percent containment of particulates during abrasive blasting activities.

6.2 Worker Health and Safety

6.2.1 Prior to beginning work, the Contractor must certify that he adopts the Worker Health and Safety Plan included in Section 8 of this Specification. As an alternative, the Contractor may execute his own Worker Health and Safety Plan that adheres to the requirements of 29 CFR 1926.62, "Lead Exposure in Construction," provided that the Contractor's plan receives prior review and approval by the Railway. Proposed Worker Health and Safety Plans should be directed to the Office of Chief Engineer – Bridges and Structures, 1200 Peachtree Street, N.E., Atlanta, Georgia 30309.

6.2.2 The Contractor shall review and discuss the Worker Health and Safety Plan with the Engineer prior to beginning work.

6.2.3 The Contractor shall fully comply with the requirements of 49 CFR 214, "Railroad Workplace Safety."

6.3 Waste Storage and Disposal

6.3.1 The Contractor shall furnish a sufficient quantity of waste storage drums at no additional cost to the Railway. All drums shall be new or reconditioned, and shall be approved for hazardous waste containment.

6.3.2 All waste is to be analyzed, characterized, and disposed of by the Railway unless specified otherwise. If the Contractor is awarded the task of waste analysis and disposal, the Contractor shall prepare a waste analysis and disposal plan describing the type of analysis to be performed, the laboratory to perform the analysis, the permanent waste disposal facility and waste transport service to be utilized, and measures to secure the waste material prior to its transport from the work site. Such a plan shall be submitted to the Office of Chief Engineer – Bridges and Structures for review and approval prior to beginning work.

6.4 Environmental Protection Statement

6.4.1 All waste collection, containment, transport, and disposal activities shall fully comply with applicable federal, state, and local regulations pertaining to air pollution, water pollution, and solid and hazardous waste.

7 WORKER HEALTH AND SAFETY PLAN

7.1 Scope and Definitions

7.1.1 This section of the Specification shall govern all construction activities on structures with lead-based coatings, pursuant to 29 CFR 1926, "Lead Exposure in Construction."

7.1.2 Definitions

OSHA – The federal Occupational Safety and Health Administration.

NIOSH – The National Institute for Occupational Health and Safety.

EPA – The federal Environmental Protection Agency.

Lead – This term refers to metallic lead, all inorganic lead compounds, and organic lead soaps. Excluded from this definition are all other organic lead compounds.

Lead-based – Any material, coating or paint that contains lead as defined herein.

Action Level – The employee exposure level set by OSHA that triggers the provisions of the standard for Lead Exposure in Construction. The action level is thirty (30) $\mu g/m^3$ (micrograms per cubic meter of air) calculated as an eight (8) hour time-weighted average.

Permissible Exposure Limit (PEL) – The maximum employee exposure level, set at fifty (50) $\mu g/m^3$ calculated as an eight (8) hour time-weighted average.

Competent Person – An onsite worker who is capable of identifying existing and potential lead hazards in the work surroundings and who has the authorization to take prompt corrective measures to eliminate such hazards. A Competent Person must supervise the Contractor's operations in order for the work to meet the requirements of 29 CFR 1926.

Exposure Assessment – The process for determining the potential and actual lead exposure of each construction activity that may create an airborne lead hazard.

PPE – Personal protective equipment.

Respirator – A device worn by a worker that mechanically filters the air for breathing. All respirators must be NIOSH-approved and meet OSHA specifications.

HEPA Filter – A high-efficiency particulate air filter that is capable of trapping and retaining 99.97 percent of 0.3-micrometer diamond mono-dispersed particles.

APR – Air purifying respirator.

PAPR – Powered air purifying respirator.

Waste Stream – A unique grouping of waste materials that have common physical or chemical properties.

Rolloff Container – A portable waste container having a typical volumetric capacity of twenty (20), thirty (30), or forty (40) cubic yards.

7.2 Laws and Regulations

7.2.1 The Contractor is directed to read all provisions of this Contract, particularly those paragraphs relating to environmental protection and worker health and safety.

7.2.2 The Contractor shall conduct his work activities in full compliance with all applicable federal, state, and local regulations. Special attention should be given to 29 CFR 1926 and 40 CFR 53, 122, 129, 262, and 403.

7.2.3 The Contractor and his designated Competent Person shall be thoroughly familiar with 29 CFR 1926 and the control of airborne lead.

7.3 Documentation and Record Keeping

7.3.1 The Contractor shall maintain the compliance plan and all supporting documentation required by 29 CFR 1926.

7.3.1 The written compliance plan shall not be complete unless supplemental site-specific information is provided and attached to this Specification. The Contractor shall use the forms attached to this Specification as a guide and shall provide all pertinent documentation required.

7.3.2 The Competent Person assigned to the work site shall maintain the documentation required at the job site.

7.3.4 The Contractor shall make the written compliance plan available for review at the work site to all his employees and subcontractors, Railway representatives, and authorized representatives of regulatory agencies.

7.3.5 The Contractor shall keep a daily log of all his employees and subcontractors, recording their social security numbers and the lead disturbing activities they performed. A listing of other employees or other persons who were not involved in lead disturbing activities shall also be recorded.

7.4 General

7.4.1 A written compliance plan is required if lead-containing materials are present at the work site.

7.4.2 If lead is present at the work site, the Contractor must certify each of the following statements by signing in the space provided:

a. All employees potentially exposed to lead have been given information and training concerning lead exposure in construction, which includes but is not limited to the applicable work procedures, the provisions of 29 CFR 1926, the hazards of lead exposure, protective measures that can be taken, and the contents of the written compliance plan.

(Contractor) _____ (Date) _____

b. All employees using respiratory protection have been medically evaluated, trained, and properly fitted for the respirators being worn.

(Contractor) _____ (Date) _____

c. The Contractor will maintain all the documentation required in connection with the OSHA regulations for lead exposure.

(Contractor) _____ (Date) _____

7.5 Description of Lead-disturbing Activities

7.5.1 The Contractor shall identify all lead-disturbing activities expected in connection with the project.

7.6 Initial Exposure Assessment

7.6.1 The Contractor must determine if the potential exists for any employees to be exposed to lead above the OSHA action level during any part of the work. Employee exposure is the exposure that would occur if the employees were not using a properly fitting respirator.

7.6.2 Initial determination of lead exposure may be based on task-related triggers referenced in 29 CFR 1926, initial air monitoring, or objective data.

7.6.3 Objective data used from air monitoring collected during the previous twelve (12) months must be submitted and included as part of this plan. To be considered as valid documentation, each source of the data must include the following information and the results judged to be similar to those expected to be developed under the working conditions on this project:

a. Specific description and location of the lead disturbing activity;

b. Environmental conditions at the time of monitoring.;

c. Lead content of the coating;

d. Total time employee was monitored;

e. Air volume being drawn through the sampling pump;

f. Calibration results from before and after monitoring for the sampling pump air volumes;

g. The average lead exposure for the time monitored;

h. Eight (8) hour time weighted average lead exposure level;

i. Copy of the laboratory analysis sheet; and

j. Statement comparing the working conditions.

7.6.4 The provisions of 29 CFR 1926 specify the need for appropriate PPE respiratory protection, decontamination and changing areas, washing facilities, and training while making an exposure assessment. These specifications must be adhered to until exposure results prove that some lesser degree of protection may be used.

7.6.5 Air monitoring shall be conducted in accordance with NIOSH Analytical and Sampling Method 7082.

7.6.6 Until initial exposure assessment results are confirmed, respirator selection shall be based on job task and made from the following table:

TABLE 1 ACTIVITY VS RESPIRATORY PROTECTION REQUIREMENTS DURING INITIAL EXPOSURE ASSESSMENT	
LEAD DISTURBING ACTIVITY	**REQUIRED RESPIRATORY PROTECTION**
1. Manual demolition of structures. 2. Manual scraping. 3. Manual sanding. 4. Heat gun applications. 5. Power tool cleaning with dust collection system. 6. Spray painting with lead paint.	a. ½ mask APR with HEPA filters; or b. ½ mask SAR operated in the demand (negative pressure) mode.
1. Using lead containing mortar. 2. Lead burning. 3. Rivet busting. 4. Power tool cleaning without dust collection system. 5. Cleanup of dry abrasive materials. 6. Abrasive blasting enclosure movement and removal.	a. Loose fitting hood or helmet PAPR with HEPA filters; or b. Hood or helmet SAR operated in continuous flow mode (CE abrasive blasting hood operated in continuous flow mode).
1. Abrasive blasting. 2. Welding. 3. Cutting. 4. Torch burning.	a. ½ mask SAR operated in the pressure demand of other positive-pressure mode; or b. Full facepiece supplied air respirator operated in pressure demand or other positive-pressure mode (type CE abrasive blasting hood operated in a positive-pressure mode).

7.7 Frequency of Air Monitoring

7.7.1 Exposure above the PEL: If the initial air monitoring found employees exposed to airborne lead above the PEL, additional exposure monitoring must be repeated at least every three (3) months until two (2) consecutive samples taken at least seven (7) days apart are found below the PEL.

7.7.2 Exposure below the PEL but above the Action Level: If the initial air monitoring found employees exposed to airborne lead below the PEL but above the Action Level, monitoring shall be repeated at least every six (6) months. If air-monitoring results taken at least seven (7) days apart reveal that the airborne lead levels are below the Action Level, air monitoring may cease.

7.7.3 Changes in Work Practices

a. The Contractor shall conduct additional air monitoring if there are any changes in the work processes, personnel, equipment, or the administrative and engineering controls.

b. The written compliance plan shall be revised and additional air monitoring initiated for all new or modified work practices.

7.8 Notification of Air Monitoring Results

7.8.1 Employees shall be notified of air monitoring results in accordance with 29 CFR 1926.

7.8.2 The Contractor shall promptly notify the Railway of the air monitoring results.

7.8.3 Complete air monitoring results shall be forwarded to the Railway's Manager Industrial Hygiene, 1200 Peachtree Street, N.E., Atlanta, Georgia 30309.

7.9 Administrative and Engineering Controls

7.9.1 The Contractor shall describe the administrative and engineering controls to be used in connection with each lead disturbing activity to minimize airborne lead exposure.

7.10 Respiratory Protection

7.10.1 All respiratory protection equipment shall meet NIOSH specifications.

7.10.2 Respiratory protection shall be worn when airborne lead exposure exceeds the OSHA PEL.

7.10.3 Selection of respiratory protection shall be guided by the following criteria:

TABLE 2 RESPIRATORY PROTECTION SELECTION GUIDE FOR AIRBORNE LEAD EXPOSURE		
PEL LEVEL	**EXPOSURE LEVEL**	**RESPIRATOR TYPE**
Less than 10 X PEL	Less than 500 µg/m³	½ mask APR with HEPA filters, or ½ mask SAR operated in demand (negative pressure) mode.
Less than 25 X PEL	Less than 1,250 µg/m³	Loose fitting hood or helmet PAPR with HEPA filters, or Hood or helmet SAR operated in continuous-flow mode (CE abrasive blasting hood operated in continuous-flow mode).
Less than 50 X PEL	Less than 2,500 µg/m³	Full facepiece APR with HEPA filters, or Tight fitting PAPR with HEPA filters, or Full facepiece SAR operated in demand mode, or ½ mask or full facepiece SAR operated in a continuous-flow mode, or Full facepiece self-contained breathing apparatus (SCBA) operated in demand mode.
Less than 1,000 X PEL	Less than 50,000 µg/m³	½ mask SAR operated in the pressure demand or other positive-pressure mode.
Less than 2,000 X PEL	Less than 100,000 µg/m³	Full facepiece supplied air respirator operated in pressure demand or other positive-pressure mode (type CE abrasive blasting hood operated in a positive-pressure mode).

7.11 Personal Protective Equipment

7.11.1 Coveralls or similar full body work clothing that does not allow dust penetration through the clothing must be provided by the Contractor and worn by all employees that may be exposed to airborne lead above the PEL.

7.11.2 Other PPE, such as eye, face, and ear protection, must be provided as needed for the work procedures.

7.11.3 Protective clothing must be provided daily to those employees whose daily airborne lead exposures are greater than 200 µg/m³. Protective clothing can be used up to a

week for exposure at or below 200 µg/m³ providing the integrity of the clothing is intact. Disposable clothing may be repaired as long as the repaired clothing is impenetrable to dust.

7.12 Hygiene Facilities and Housekeeping

7.12.1 If feasible, shower facilities must be provided and used by all employees exposed above the PEL. If they are not provided, the Contractor will provide a written statement explaining why shower facilities are not feasible.

7.12.2 The Contractor must provide adequate hand and face washing facilities and must ensure that employees use them when temporarily leaving the lead contaminated area or at the end of shifts where shower facilities are not provided. Whenever a worker leaves the lead contaminated area to proceed to a non-contaminated area, that person must remove any contaminated clothing and thoroughly wash all exposed skin that may be contaminated with lead dust or fume.

7.12.3 The Contractor shall provide a respirator cleaning area and all the necessary supplies where respirators can be cleaned and decontaminated.

7.12.4 All cleaning and decontamination areas must be delineated by a visible barrier in order to limit access and keep lead contamination from being spread to non-contaminated areas.

7.12.5 Food, beverages, tobacco products, and cosmetics are prohibited in the lead contaminated area and the decontamination area. The Contractor will establish an eating area away from lead contaminated areas.

7.12.6 The Contractor will ensure that no one leaves the work site with any contaminated protective work clothing or equipment.

7.13 Medical Surveillance and Removal

7.13.1 The Contractor shall be governed by 29 CFR 1926, Subpart 62, Paragraphs (j) and (k), concerning medical surveillance and medical removal protection.

7.13.2 The Contractor must make medical examinations available to all employees who have the potential to be exposed to lead.

7.13.3 The Contractor must provide further medical surveillance depending on the employees' exposure levels as determined by air monitoring and blood testing.

7.13.4 If blood lead levels are found to be at or above the maximum levels stated in the OSHA regulations, the Contractor is required to provide special protective measures or remove any employee from the work where the employee is exposed to lead.

7.13.5 These medical provisions are necessary to ensure that all employees who are potentially exposed to lead hazards are medically and physically capable of performing the specified work.

7.14 Preparing the Work Site

7.14.1 Warning signs shall be posted at the work site where employee exposure may exceed the Action Level. The signs should contain the following information:

WARNING
LEAD WORK AREA
POISON
NO SMOKING OR EATING

7.14.2 The Contractor shall erect visible barriers around the areas where the lead disturbing activity will occur as well as the areas to be used for decontamination and cleaning.

7.14.3 The work area and the decontamination area should be adjacent to each other or connected by delineating a corridor between them with a visible barrier.

7.14.4 In primitive areas where permanent facilities and shower facilities are not in use, a tarp shall be placed on the ground in the decontamination area to facilitate containment of lead dust and debris off of workmen and equipment.

7.14.5 Separate areas for changing clothing, cleaning respiratory equipment, and washing shall be established adjacent to the decontamination area.

7.15 Entering the Work Site

7.15.1 All workers who will be exposed to airborne lead during a lead disturbing activity must enter and exit the work area directly through the decontamination area.

7.15.2 Workers shall don protective coveralls upon entering the decontamination area. They shall then put on gloves and boot covers, and shall tape the coveralls over the gloves and boot covers using duct tape.

7.15.3 After workers have donned and taped their coveralls, gloves, and boot covers, they shall put on their respirators and perform a negative and positive pressure fit test. The fit of each respirator shall be adjusted as necessary.

7.15.4 All other PPE necessary for the work procedures shall then be donned, checked, and adjusted before workers pass into the work area.

7.16 Exiting the Work Site

7.16.1 All persons exposed to lead disturbing activity must proceed directly to the decontamination area before leaving the work site.

7.16.2 Inside the decontamination area workers will remove gross contamination and debris from the protective clothing by lightly brushing off the debris and vacuuming using equipment with HEPA filters. Contaminated clothing must not be cleaned using compressed air, by shaking, or by other methods that would disperse lead contaminated dust into the air.

7.16.3 Once all gross contamination is removed, workers may remove head coverings, gloves,

boot covers, and coveralls. Coveralls should be removed by rolling them downward from the shoulders so that any outside contamination is rolled up inside the coveralls. This procedure shall be completed while wearing the respiratory protection. Rolled-up coveralls shall be either stored in plastic bags for reuse or disposed of in a proper waste receptacle.

7.16.4 Lastly, respiratory equipment shall be carefully removed and then thoroughly cleaned, inspected, and properly stored for reuse. Disposable respirators or any replaced parts from non-disposable respirators shall be disposed of properly.

7.16.5 Workers will then proceed to the shower room where showers are provided. All workers who are unable to shower at the work site shall thoroughly wash their hands, face, and any other exposed skin areas before leaving the work site. All waste from washing shall be disposed of properly. Workers who are unable to shower at the work site shall be advised to do so immediately upon arriving at their place of residence.

7.16.6 If necessary in an emergency situation, workers may exit the contaminated area without proper decontamination.

7.17 Work Site Cleanup

7.17.1 The entire work site including the decontamination area shall be cleaned up at the end of each workday.

7.17.2 Lead contaminated equipment shall be brought to the decontamination area, vacuumed using equipment with HEPA filters, and wiped clean.

7.17.3 Tarps used for containment of lead dust and debris must be carefully swept and vacuumed using equipment with HEPA filters.

7.17.4 Workers shall be fully protected during cleanup. All waste generated shall be disposed of properly.

7.18 Environmental Protection

7.18.1 General

a. The Contractor shall perform all necessary packaging and managing of the industrial wastes generated during the project.

b. The Contractor shall be responsible for the disposal of general trash and garbage generated during the project. All such material must be taken to a permitted sanitary landfill.

7.18.2 Collection and Containerization of Waste Materials

a. The Contractor is to collect, identify, and separate by type all waste material into one of the following waste streams. Any generated waste type that is not described below shall be brought to the attention of the Engineer for specific handling instructions.

i. Spent Abrasive (mineral) – This waste stream shall consist of mineral fines and paint chips.

ii. Spent Abrasive (steel) – This waste stream shall consist of steel fines and paint chips. Fines may become fused and form a monolith due to moisture. This stream shall include only waste resulting from the removal debris and fines from recyclable grit.

iii. Paint Related Materials – This waste stream shall consist of organic liquids having various colors and solvent odors, and solid contents between ten (10) and fifty (50) percent. This stream may include spent solvents.

iv. Safety Apparel – This waste stream shall consist of safety equipment such as spent coveralls, gloves, boot covers, respirator cartridges, and so forth. Such equipment may be expected to contain a limited quantity of paint chips and dust.

v. Wash Waters – This waste stream shall consist of water and residue produced during the decontamination of equipment and personnel.

vi. Caustic Stripper – This waste stream shall consist of liquid waste containing paint sludge. The color of this waste stream will vary with the paint being removed.

b. Each waste stream except Wash Waters may contain up to twenty (20) percent spent safety apparel; otherwise, the mixing of waste streams is prohibited. The Contractor shall be responsible for all costs incurred due to the mixing of wastes.

c. The Railway may provide covered rolloff containers for the disposal of bulk volumes of waste stream identified as Spent Abrasive. The Contractor shall provide DOT-approved containers for all other waste types as necessary.

e. For each generated waste stream, the Contractor must completely fill a single waste container prior to filling another. Thus the Contractor shall not have more than one partially filled container for each waste stream at the end of the work. The Contractor shall ensure that all rolloff containers are properly loaded and that the weight and volume capacities of the containers are not exceeded.

7.18.3 Container Management and Storage

a. The Contractor shall manage all waste material generated at the work site until such material is properly stored.

b. The Contractor shall provide for secure temporary storage of the wastes, consulting the Engineer to determine the best location for the storage area. All storage areas shall be located on Railway property and above the 100-year (base) flood elevation. During extreme weather, the Railway shall inspect the storage areas and take precautions as needed to prevent loss of the waste containers. When requested to do so, the Contractor shall assist the Railway in moving the waste containers.

c. Each waste container shall be assigned a unique code number. The code will include reference to the state location, month and year generated, bridge number (including its prefix or suffix), and the sequential container number.

d. The Contractor will label each container promptly upon sealing the waste material in the container. The label shall display the container code number, the waste stream name, and the date the container was filled.

7.18.4 Waste Spills

a. The Contractor is expected to perform all work without the spillage of materials or wastes. The Contractor shall immediately notify the Engineer upon any such spillage.

b. All material resulting from the cleanup of a spill is to be handled as a unique waste stream. The Contractor shall record the description of the spill, the cause of the spill, and the measures taken to clean up the spill.

c. The Contractor shall perform or arrange for the cleanup required in connection with a spill at no cost to the Railway.

END OF SPECIFICATION

H.4.6 - SPECIFICATION FOR INSTALLATION OF UNDER TRACK CULVERTS BY OPEN CUT METHOD

1. SCOPE

   A. This specification covers the procedure for the installation of under track culverts by the "Open Cut Method". This method is limited to fills less than or equal to 10 feet as measured from the pipe flowline to the base of rail. For fills greater than 10 feet, the prior approval of the Railroad is required.

   B. Installations by open cut will not be permitted under mainline tracks, tracks carrying heavy tonnage or tracks carrying passenger trains. Also, open cut shall not be used within the limits of a highway/railroad grade crossing or its approaches, 25 feet either side of traveled way, where possible.

   C. This Specification is only for culverts installed in accordance with Section H.3 of the Norfolk Southern Public Projects Manual.

2. GENERAL

   A. Except as otherwise specified hereafter, the current AREMA Chapter 1, Parts 4 applies to all work under this section. Minimum pipe size shall be 36 inches in diameter; gage and size selected by Engineer. Any size less than 36 inches or greater than 72 inches must be approved by the Railroad.

3. EXCAVATION

   A. In soil conditions other than sandy soils, the bottom of the proposed trench shall be excavated to a minimum of 6 inches below the proposed flowline elevation and the width of the trench shall be equal to 1 pipe diameter plus 24 inches (or as necessary to allow for compaction by mechanical tampers).

   B. In soft soil conditions the bottom of trench shall be excavated a minimum of 12 inches below the proposed flowline elevation, the poor foundation material removed and filled with approved base material.

   C. If rock is encountered during excavation a minimum of 12 inches of base material shall be required under the pipe. Shoring is required for excavations deeper than 5 feet or sides slopes shall be cut back a sufficient amount to prevent slides.

4. BACKFILL

   A. At locations where open cut is permitted, the trench is to be backfilled with crushed stone with a top size of the aggregate to be a maximum of 2 inches and to have no more than 5% passing the number 200 sieve. The gradation of the material is to be such that a dense stable mass is produced.

   B. The backfill material shall be placed in loose 6 inch lifts and compacted to at least 95% of its maximum density with a moisture content that is no more than 1% greater than or 2% less than the optimum moisture as determined in accordance with current ASTM Designation D – 1557 (Modified Proctor). When the backfill material is within 3 feet of the subgrade elevation (the interface of the ballast and the subsoil) a compaction of at least 98% will be required.

C. All backfilled pipes laid either perpendicular or parallel to the tracks must be designed so that the backfill material will be positively drained. This may require the placement of lateral drains on pipes laid longitudinally to the track and the installation of stub perforated pipes at the edge of the slopes.

5. PIPE STRUTTING

A. Corrugated metal pipes 48 inch and larger shall be shop strutted to produce 5% vertical elongation. Struts shall be horizontal when pipe is placed.

6. SPACING FOR MULTIPLE LINES OF PIPE

PIPE DIAMETER	MINIMUM CLEAR DISTANCE "C"
UP TO 72" DIAMETER	1/2 DIAMETER
ABOVE 72" DIAMETER	36 INCHES

7. OLD CULVERT

A. The existing culvert shall be completely filled with a sand and cement grout mixture consisting of 4 parts sand to 1 part cement and enough clean water to facilitate pumping. Grouting of the existing culvert to be accomplished after the new culvert is placed in service.

END OF SPECIFICATION

H.4.7 - SPECIFICATIONS FOR INSTALLATION OF UNDER TRACK CULVERTS BY JACK & BORE METHOD

1. SCOPE

   A. This specification covers the procedure for installation of under track culverts by the "Jack and Bore" Method. This method consists of pushing the pipe into the earth with a boring auger rotating within the pipe to remove the spoil.

   B. This Specification is only for culverts installed in accordance with Section H.3 of the Norfolk Southern Public Projects Manual

2. GENERAL

   A. Except as otherwise specified hereafter the current AREMA Chapter 1, Parts 4 applies to all work under this section. Minimum pipe size shall be 36 inches in diameter. The pipe size and gage shall be selected by the Engineer. The use of any size less than 36 inches or greater than 72 inches must be approved by the Railroad.

   B. Installations shall have a bore hole essentially the same as the outside diameter of the pipe plus the thickness of the protective coating.

   C. The use of water or other liquids to facilitate casing emplacement and spoil removal is prohibited.

   D. If during installation an obstruction is encountered which prevents installation of the pipe in accordance with this specification, the pipe shall be abandoned in place and immediately filled with grout. The abandoned pipe shall be completely filled with a sand and cement grout mixture consisting of 4 parts sand to 1 part cement and enough clean water to facilitate pumping. A new installation procedure and revised plans must be submitted to, and approved by, NS before work can resume.

3. APPROVED CULVERT TYPES

   A. Culvert installed by the Jack and Bore method shall be limited to Smooth Steel Pipe.

4. PIPE CONNECTIONS

   A. Smooth steel casing pipe shall be connected by welding using a full depth, single "V" groove butt weld.

5. SUBMITTALS

   A. Plans and description of the jack and bore arrangement to be used shall be submitted to the Railroad for approval and no work shall proceed until such approval is obtained.

6. GROUTING

   A. A uniform mixture of 1:6 (cement:sand) cement grout shall be placed under pressure through the grout holes to fill any voids which exist between the pipe and the undisturbed earth.

B. Grouting shall start at the lowest hole in each grout panel and proceed upwards simultaneously on both sides of the pipe.

C. A threaded plug shall be installed in each grout hole as the grouting is completed at that hole.

7. SOIL STABILIZATION

A. Pressure grouting of the soils or freezing of the soils before jacking and boring may be required at the direction of the Railroad to stabilize the soils, control water, prevent loss of material and prevent settlement or displacement of embankment. Grout shall be cement, chemical or other special injection material selected to accomplish the necessary stabilization.

B. The materials to be used and the method of injection shall be prepared by a Registered Professional Soils Engineer or by an experienced and qualified company specializing in this work and submitted for approval to the Railroad before the start of work. Proof of experience and competency shall accompany the submission.

8. DEWATERING

A. When water is known or expected to be encountered, pumps of sufficient capacity to handle the flow shall be maintained at the site, provided the contractor has received approval from the Railroad to operate them.

B. Pumps in operation shall be constantly attended on a 24-hour basis until, in the sole judgement of the Railroad, the operation can be safely halted.

C. When dewatering, close observation shall be maintained to detect any settlement or displacement of railroad embankment, tracks, and facilities.

9. INSTALLATION

A. Unless otherwise approved by the Railroad, The boring operation shall be progressed on a 24-hour basis without stoppage (except for adding lengths of pipe) until the leading edge of the pipe has reached the receiving pit.

B. The Contractor shall inspect the site where the culvert is to be installed and familiarize himself with the conditions under which the work will be performed and with all necessary details as to the orderly prosecution of the work. The omission of any details for the satisfactory installation of the work in its entirety, which may not appear herein, shall not relieve the Contractor of full responsibility.

C. The front of the pipe shall be provided with mechanical arrangements or devices that will positively prevent the auger from leading the pipe so that no unsupported excavation is ahead of the pipe.

D. The auger and cutting head arrangement shall be removable from within the pipe in the event an obstruction is encountered. If the obstruction cannot be removed without excavation in advance of the pipe, procedures as outlined in Section 3.D of this specification must be implemented immediately.

E. The over-cut by the cutting head shall not exceed the outside diameter of the pipe by more than ½ inch. If voids should develop or if the bored hole diameter is greater than the outside

diameter of the pipe (plus coating) by more than approximately 1 inch, grouting (see Section 5.D.2) or other methods approved by NS, shall be employed to fill such voids.

F. The face of the cutting head shall be arranged to provide a reasonable obstruction to the free flow of soft or poor material.

G. Construction shall be carried on in such a manner that settlement of the ground surface above the pipe line shall be held to an absolute minimum. The installation of the pipe line shall follow the heading or boring excavation as soon as possible.

H. If, in the opinion of the Railroad, the installation of the pipe is being conducted in an unsafe manner, the Contractor will be required to stop work and bulkhead the heading until suitable agreements are reached between the Contractor and the Railroad. The Railroad will not be responsible and shall be saved harmless in the event of delays to the Contractor's work resulting from any cause whatsoever.

10. TRACK MONITORING

A. For all Jack and Bore Operations, Track Monitoring will be required in accordance with Norfolk Southern's Special Provisions for Protection of Railway Interests, Section 5.I (Norfolk Southern Public Projects Manual – Appendix E, Section 5.1).

11. SAFETY REQUIREMENTS

A. At all times when the work is being progressed, a field supervisor for the work with no less than twelve (12) months experience in the operation of the equipment being used shall be present. If boring equipment or similar machines are being used, the machine operator also shall have no less than twelve (12) months experience in the operation of the equipment being used.

12. FILLING OLD CULVERT

A. The existing culvert shall be completely filled with a sand and cement grout mixture consisting of 4 parts sand to 1 part cement and enough clean water to facilitate pumping. Grouting of the existing culvert to be accomplished after the new culvert is placed in service.

END OF SPECIFICATION

H.4.8 - SPECIFICATIONS FOR INSTALLATION OF UNDER TRACK CULVERT BY TUNNELING METHOD

1. SCOPE

   A. This specification covers the procedure for installation of undertrack culverts by the "Tunneling" method. This method consists of placing rings of liner plate within the tail section of a tunneling shield or tunneling machine.

   B. This Specification is only for culverts installed in accordance with Section H.3 of the Norfolk Southern Public Projects Manual

2. GENERAL

   A. Except as otherwise specified hereafter the current AREMA Chapter 1, Parts 4 applies to all work under this section. Minimum pipe size shall be 48 inches in diameter. The pipe size and gage shall be selected by the Engineer.

   B. The use of water or other liquids to facilitate casing emplacement and spoil removal is prohibited.

3. APPROVED CULVERT TYPES

   A. Culverts installed by the Tunneling method shall be limited to tunnel liner plate pipe. Reinforced concrete pipe will not be allowed to be installed under main line track or Company maintained tracks.

   B. A tunneling shield shall be used for all liner plate installations unless otherwise approved by the Railroad.

4. SUBMITTALS

   A. Manufacturer’s shop detail plans and manufacturer’s computations showing the ability of the tunnel liner plates to resist the jacking stresses shall be submitted to the Railroad for approval.

   B. Plans and description of the tunneling arrangement to be used shall be submitted to the Railroad for approval and no work shall proceed until such approval is obtained.

5. GROUTING

   A. A uniform mixture of 1:6 (cement:sand) cement grout shall be placed under pressure through the grout holes to fill any voids which exist between the pipe and the undisturbed earth.

   B. Grouting shall start at the lowest hole in each grout panel and proceed upwards simultaneously on both sides of the pipe.

   C. A threaded plug shall be installed in each grout hole as the grouting is completed at that hole.

   D. When grouting tunnel liner plates, grouting shall be kept as close to the heading as possible, using grout stops behind the liner plates if necessary. Grouting shall proceed as directed by the Railroad, but in no event shall more than 6 lineal feet of tunnel be progressed beyond the grouting.

6. SOIL STABILIZATION

   A. Pressure grouting of the soils or freezing of the soils before tunneling may be required at the direction of the Railroad to stabilize the soils, control water, prevent loss of material and prevent settlement or displacement of embankment. Grout shall be cement, chemical or other special injection material selected to accomplish the necessary stabilization.

   B. The materials to be used and the method of injection shall be prepared by a Registered Professional Soils Engineer or by an experienced and qualified company specializing in this work and submitted for approval to the Railroad before the start of work. Proof of experience and competency shall accompany the submission.

7. DEWATERING

   A. When water is known or expected to be encountered, pumps of sufficient capacity to handle the flow shall be maintained at the site, provided the contractor has received approval from the Railroad to operate them.

   B. Pumps in operation shall be constantly attended on a 24-hour basis until, in the sole judgement of the Railroad, the operation can be safely halted.

   C. When dewatering, close observation shall be maintained to detect any settlement or displacement of railroad embankment, tracks, and facilities.

8. INSTALLATION

   A. The Contractor shall inspect where the tunnel is to be installed and familiarize himself with the conditions under which the work will be performed and with all necessary details as to the orderly prosecution of the work. The omission of any details for the satisfactory installation of the work in its entirety, which may not appear herein, shall not relieve the Contractor of full responsibility.

   B. Unless otherwise approved by the Railroad, the tunneling shall be conducted continuously, on a 24-hour basis, until the tunnel liner extends at least beyond the theoretical railroad embankment line (See Norfolk Southern Typical Drawing No. 4 – Shoring Design Guide – Shoring Requirements).

   C. At any interruption of the tunneling operation, the heading shall be completely bulkheaded.

   D. The shield shall be of steel construction, designed to support a railroad track, in addition to the other loadings imposed. The advancing face shall be provided with a hood, extending no less than 20 inches beyond the face and extending around no less than the upper 240 degrees of the total circumference. It shall be of sufficient length to permit the installation of at least one complete ring of liner plates within the shield before it is advanced for the installation of the next ring of liner plates. The shield shall conform to and not exceed the outside dimensions of the liner plate tunnel being placed by more than 1 inch at any point on the periphery unless otherwise approved by the Railroad.

E. The shield shall be adequately braced and provided with necessary appurtenances for completely bulkheading the face with horizontal breastboards, and arranged so that the excavation can be benched as may be necessary. Excavation shall not be advanced beyond the edge of the hood, except in rock.

F. The tunneling operation may commence from either end. Construction of the tunnel shall be done in such a manner that settlement of the ground surface above the tunnel shall be held to an absolute minimum.

G. Coated plates shall be handled in such a manner as to prevent bruising, scaling, or breaking of the coating. Any plates that are damaged during handling or placing, shall be replaced by the Contractor at his expense, except that small areas with minor damage may be repaired by the Contractor as directed by the Engineer.

H. Liner plates shall be assembled in accordance with the manufacturer's instructions.

I. The liner plates shall have tapped grout holes for no smaller than 1 ½ inch pipe, spaced at approximately 3 feet around the circumference of the tunnel liner and 4 feet longitudinally.

J. Grouting behind the liner plates shall be in accordance with Section 5 of this specification.

K. Concrete or asphalt paved inverts shall be used in all tunnel liner pipe pipes. If concrete is used, a minimum concrete compressive strength shall be 3000 p.s.i. after 28 days. The bottom 25% of culvert periphery shall be covered with concrete (or asphalt) to a depth of 1 inch above the crest of the corrugations for circular pipes and 40% of the periphery for pipe arches. The concrete pavement shall be reinforced with 6 x 6 (W2.9 x W2.9) welded wire fabric. This wire shall be attached to the pipe by either directly welding to the pipe or by mechanical attachment to the bolts.

L. The Contractor shall provide all necessary bracing, bulkheads, and/or shields to insure complete safety to all traffic at all times during the progress of the work; and he shall perform the work in such a manner as to not interfere with normal traffic over the work.

M. The Contractor shall construct temporary dikes or sheeting to divert or pump water through the culvert to allow construction "in the dry." Channel work necessary to direct the stream to and from the inlet and discharge ends of the completed culvert is considered part of the project.

N. All working operations of the Contractor, subcontractor, and/or their agents or employees must be subordinate to the free and unprotected use of the right-of-way for the passage of traffic without delay or danger to life, equipment, or property. The Contractor shall conduct his operations in such a manner that all work will be performed below road level and without obstructions on the roadbed.

O. If in the opinion of the Railroad, the installation of the tunnel is being conducted in an unsafe manner, the Contractor will be required to stop work and bulkhead the heading until suitable agreement is reached between the Contractor and the Railroad. The Company will not be responsible and shall be saved harmless in the event of delays to the Contractor's work resulting from any cause whatsoever. The Contractor must be fully equipped and experienced in the installation of large diameter structures by tunneling methods.

P. Blasting will not be permitted.

9. FILLING OLD CULVERT

A. The existing culvert shall be completely filled with a sand and cement grout mixture consisting of 4 parts sand to 1 part cement and enough clean water to facilitate pumping. Grouting of the existing culvert to be accomplished after the new culvert is placed in service.

END OF SPECIFICATION

I. Norfolk Southern Typical Drawings and Details

DISCLAIMER: The Typical Drawings listed below are for reference only and are subject to change at any time. The Sponsor and/or their Designer are required to submit all drawings, including those incorporating any of the typical details below to the appropriate Norfolk Southern Public Projects Engineer for review and approval.

1. Overhead Bridge Details - Permanent Clearances
2. Overhead Bridge Details - Ditch and Drainage
3. Overhead Bridge Details - Bridge Fencing
4. Shoring Design Guide - Shoring Requirements
5. Shoring Design Guide - Lateral Pressures from Train Loads
6. Track Design Guide - Reverse Curve Diagram
7. Track Design Guide - Curve Superelevation
8. Track Design Guide - Roadbed Section Double Main
9. Track Design Guide - Roadbed Section Single Main
10. Track Design Guide - Roadbed Section Heavy Tonnage
11. Underpass Bridge Details - Typical Cross Section Single Track
12. Underpass Bridge Details - Typical Cross Section Double Track
13. Underpass Bridge Details - Handrail
14. Underpass Bridge Details - Vandal Fencing with Handrail I
15. Underpass Bridge Details - Vandal Fencing with Handrail II
16. Underpass Bridge Details - Deck Drain I
17. Underpass Bridge Details - Deck Drain II
18. Underpass Bridge Details - Waterproofing
19. At-grade Crossing Details - Asphalt Paving with Rubber Flange Way
20. Overhead Protection for Trails Under Norfolk Southern
21. Right-of-Way Fencing Details
22. Security Fencing Details
23. Geotextile Ballast Protection Details

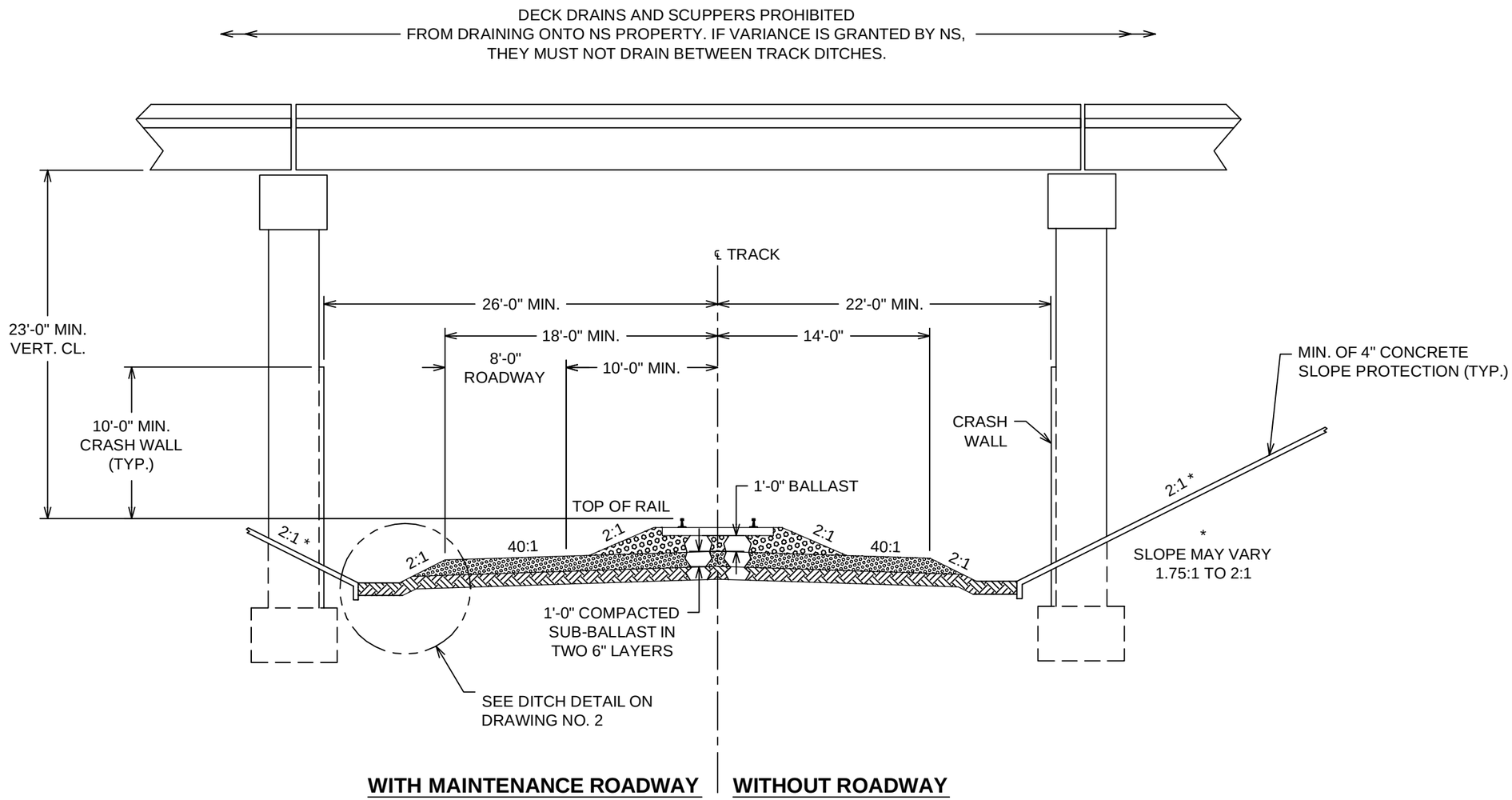

PROFILE

NTS

NOTES:

1. HORIZONTAL DIMENSIONS SHOWN ARE PERPENDICULAR TO ℄ OF TRACK.
2. HORIZONTAL DIMENSIONS SHOWN ARE THE MINIMUM WHICH WILL ALLOW THE CONSTRUCTION OF NORFOLK SOUTHERN'S STANDARD ROADBED SECTION.
3. ACTUAL REQUIRED HORIZONTAL CLEARANCES MAY NEED TO BE INCREASED DUE TO EXISTING ROADBED SECTION, LOCATION OF PARALLEL DITCHES, HYDROLOGICAL CONDITIONS, AND **FUTURE TRACK REQUIREMENTS.**
4. REFER TO PUBLIC PROJECTS MANUAL APPENDIX H, SECTION H.I.4.A. FOR SPLICE REQUIREMENTS IN SPANS LOCATED OVER NS PROPERTY.

REVISIONS		
DATE	LTR.	DESCRIPTION
9/23/2013	1	REVISE DECK DRAIN DIMENSION

NORFOLK SOUTHERN

PUBLIC PROJECTS MANUAL
TYPICAL DRAWINGS

OVERHEAD BRIDGE DETAILS
PERMANENT CLEARANCES

REF. NO.: SEC 1 - OHB - 3 - SHT 1

DATE: AUGUST 1, 2015 | DRAWING NO.: 1

Filename: P:\6248\400 - TECHNICAL\433 - PUBLIC PROJECTS MANUAL\STANDARD DRAWINGS\1_OVERHEAD BRIDGE DETAILS - PERMANENT CLEARANCES.DWG

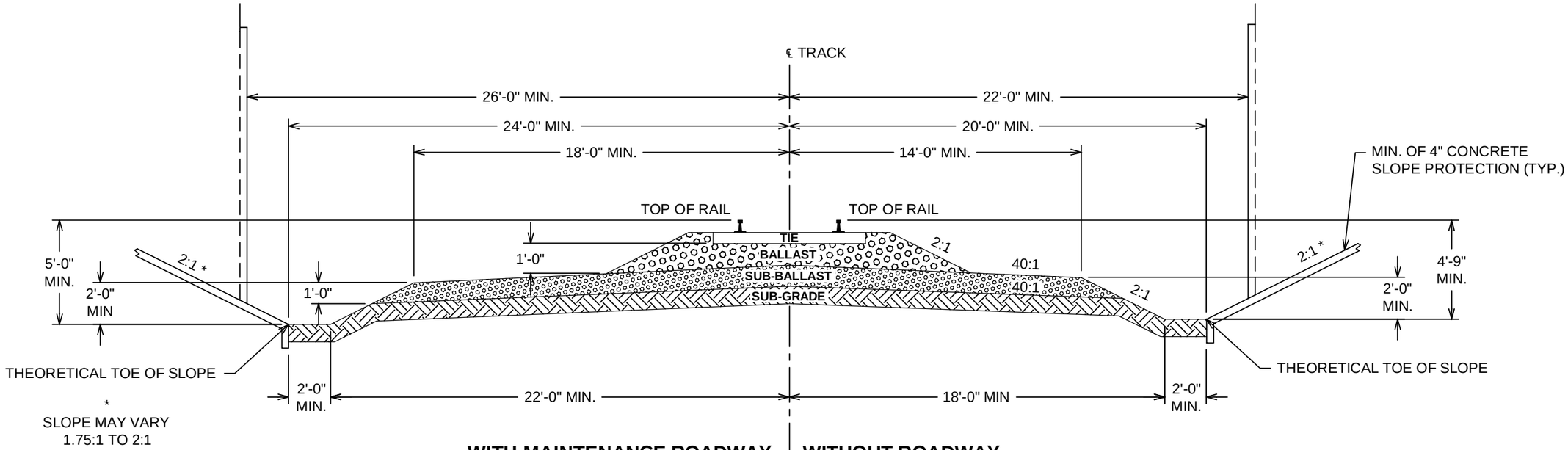

ROADBED PROFILE WITH OPEN DITCHES

NTS

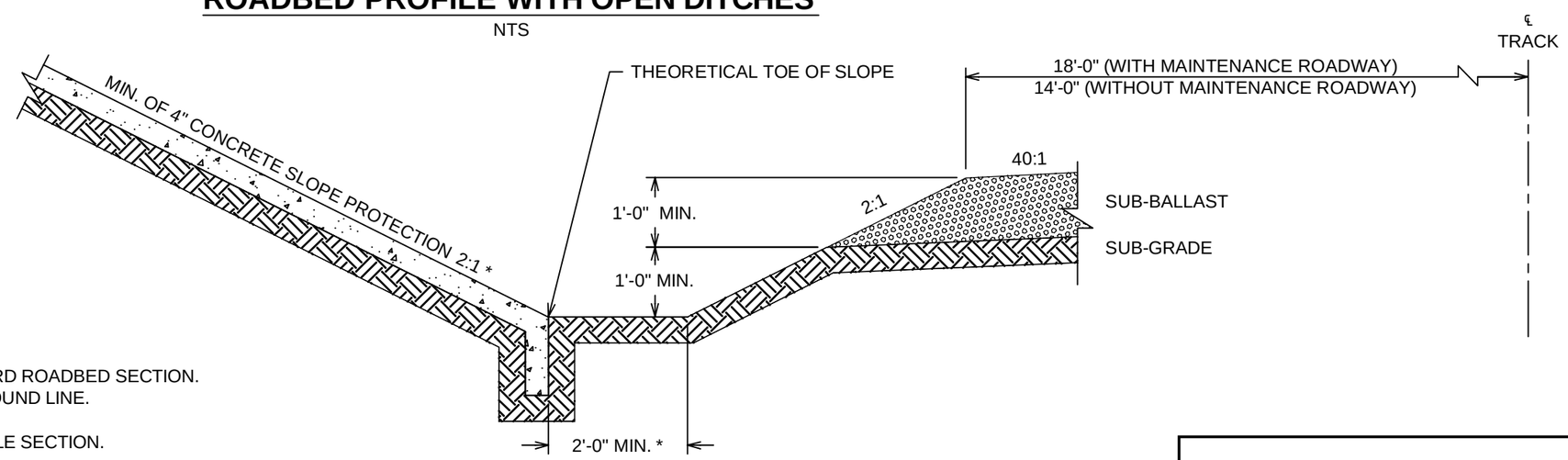

DITCH DETAIL

NTS

NOTES:

1. THEORETICAL TOE OF SLOPE IS BASED ON THE STANDARD ROADBED SECTION. ACTUAL TOE OF SLOPE MAY VARY DUE TO EXISTING GROUND LINE.
2. THE DITCH SECTION SHOWN IS THE MINIMUM ACCEPTABLE SECTION.
3. THE DITCH SECTION IS TO BE INCREASED AS REQUIRED BY LOCAL CONDITIONS, BASED ON HYDROLOGICAL AND HYDRAULIC STUDIES.
4. HORIZONTAL DIMENSIONS SHOWN ARE PERPENDICULAR TO ℄ OF TRACK.
5. HORIZONTAL DIMENSIONS SHOWN ARE THE MINIMUM WHICH WILL ALLOW THE CONSTRUCTION OF NORFOLK SOUTHERN'S STANDARD ROADBED SECTION.
6. ACTUAL REQUIRED HORIZONTAL CLEARANCES MAY NEED TO BE INCREASED DUE TO EXISTING ROADBED SECTION, LOCATION OF PARALLEL DITCHES, HYDROLOGICAL CONDITIONS, AND **FUTURE TRACK REQUIREMENTS.**

REVISIONS		
DATE	LTR.	DESCRIPTION

NORFOLK SOUTHERN®

PUBLIC PROJECTS MANUAL
TYPICAL DRAWINGS

OVERHEAD BRIDGE DETAILS
DITCH AND DRAINAGE

REF. NO.: SEC 1 - OHB - 4 - SHT 3

DATE: AUGUST 1, 2015 | DRAWING NO.: 2

Filename: P:\6248\400 - TECHNICAL\433 - PUBLIC PROJECTS MANUAL\STANDARD DRAWINGS\2_OVERHEAD BRIDGE DETAILS - DITCH AND DRAINAGE.DWG

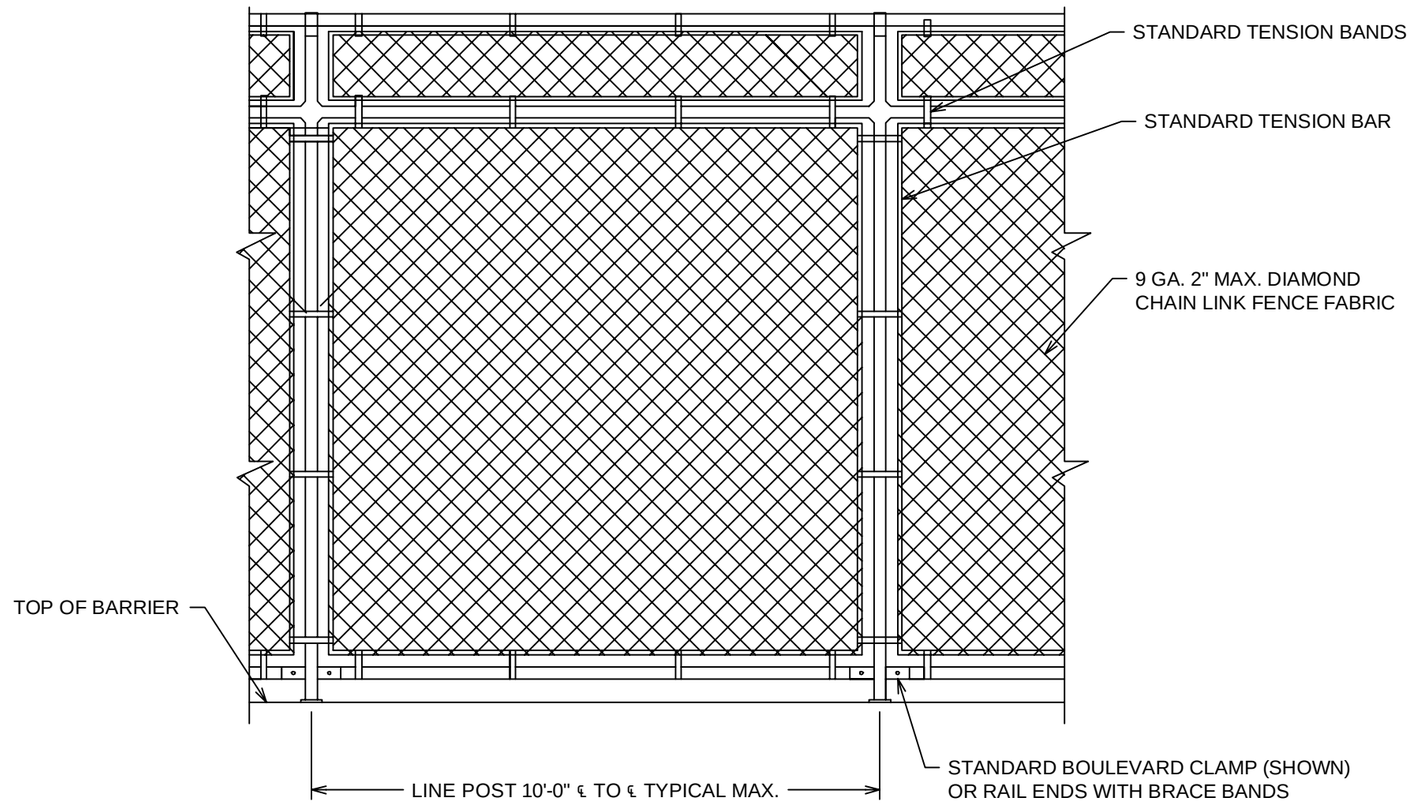

FENCE DETAIL

NTS

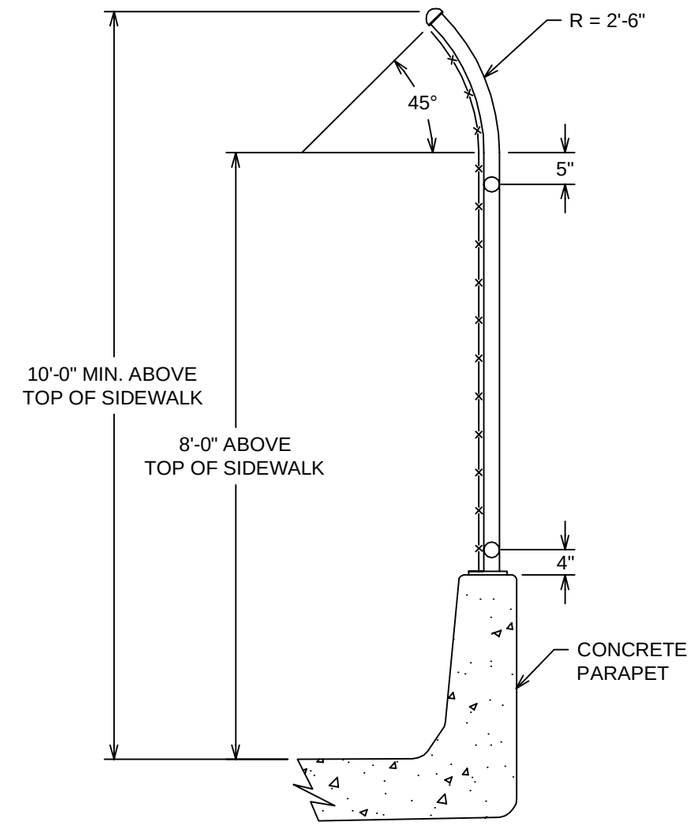

BARRIER DETAIL

NTS

NOTES:

1. FASTEN FENCE FABRIC TO POST AND RAILS IN ACCORDANCE WITH APPLICABLE HIGHWAY DEPARTMENT STANDARDS.
2. FASTEN FENCE POST TO PARAPET IN ACCORDANCE WITH APPLICABLE HIGHWAY DEPARTMENT STANDARDS.
3. CHAIN LINK FENCE SHALL BE GALVANIZED OR VINYL COATED IN ACCORDANCE WITH APPLICABLE HIGHWAY DEPARTMENT STANDARDS.

REVISIONS		
DATE	LTR.	DESCRIPTION

NORFOLK SOUTHERN®

PUBLIC PROJECTS MANUAL
TYPICAL DRAWINGS

OVERHEAD BRIDGE DETAILS
BRIDGE FENCING

REF. NO.: N/A

DATE: AUGUST 1, 2015 | DRAWING NO.: 3

Filename: P:\6248\400 - TECHNICAL\433 - PUBLIC PROJECTS MANUAL\STANDARD DRAWINGS\3_OVERHEAD BRIDGE DETAILS - BRIDGE FENCING.DWG

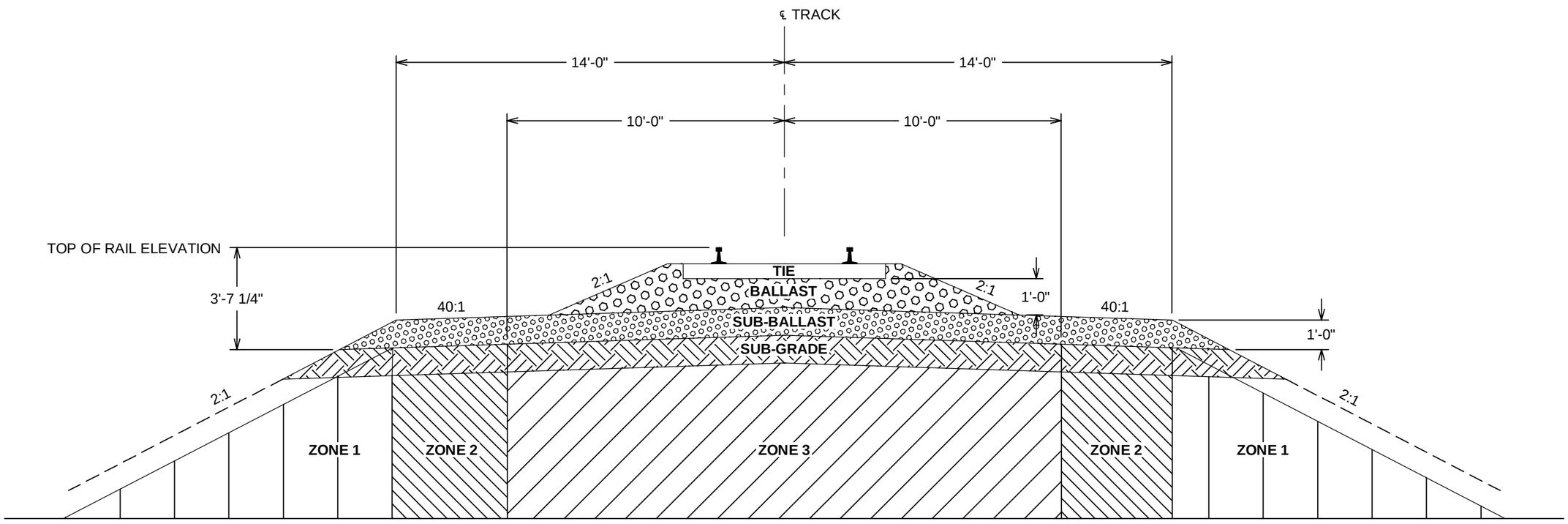

ROADBED PROFILE - SHORING REQUIREMENTS (NTS)

ZONE 1 EXCAVATION WITHIN ZONE 1 WILL REQUIRE SHORING FOR THE PROTECTION OF THE RAILROAD

ZONE 2 EXCAVATION WITHIN ZONE 2 WILL REQUIRE SHORING CONSISTING OF INTERLOCKING SHEETING FOR THE PROTECTION OF THE RAILROAD

ZONE 3 **NO EXCAVATIONS WILL BE ALLOWED IN ZONE 3**

NOTES:

1. EXCAVATIONS OUTSIDE OF ZONE 1 MAY REQUIRE SHORING FOR SAFETY. LATERAL PRESSURES DUE TO TRAIN LOADINGS DO NOT AFFECT SHORING DESIGN OUTSIDE OF ZONE 1.

2. REFER TO PUBLIC PROJECTS MANUAL APPENDIX H, SECTION H.I.6.A. (OVERHEAD BRIDGE) OR SECTION H.2.8.A (UNDERPASS BRIDGE) AND APPENDIX H FOR ADDITIONAL SHORING LOCATION REQUIREMENTS.

REVISIONS		
DATE	LTR.	DESCRIPTION
9/23/2013	1	REVISE ZONE 2 DIMENSION AND AREA
1/1/15	2	REVISED NOTE 2

NORFOLK SOUTHERN®

PUBLIC PROJECTS MANUAL
TYPICAL DRAWINGS

SHORING DESIGN GUIDE
SHORING REQUIREMENTS

REF. NO.: SEC 1 - OHB - 5 - SHT 4

DATE: AUGUST 1, 2015 DRAWING NO.: 4

Filename: P:\6248\400 - TECHNICAL\433 - PUBLIC PROJECTS MANUAL\STANDARD DRAWINGS\4_SHORING DESIGN GUIDE - SHORING REQUIREMENTS.DWG

LATERAL PRESSURES FROM COOPERS E-80 TRAIN LOADS

THE BOUSSINESQ EQUATION FOR STRIP LOADS IS SHOWN IN THE AREMA MANUAL FOR RAILWAY ENGINEERING, CHAPTER 8, SECTION 20.3.2.2

BOUSSINESQ EQUATION:

$$PS = (2q/\pi) * (\beta-(SIN(\beta) * COS(2\alpha)))$$

WHERE:

PS	=	ACTIVE PRESSURE FROM SURCHARGE LOADING
β	=	ATAN((CLT+TL/2) / HS) - ATAN((CLT-TL/2) / HS) IN RADIANS
α	=	β/2 + ATAN((CLT-TL/2) / HS) IN RADIANS
q	=	UNIFORM SURCHARGE LOAD FROM TRAINS = 80 KIPS/ (5) (TL)
CLT	=	DISTANCE FROM FACE OF RETAINING WALL TO CENTERLINE OF TRACK
TL	=	TIE LENGTH = 8.5' STANDARD
HS	=	DEPTH BELOW APPLIED SURCHARGE LOADING

Table 1 - Lateral Pressure from E-80 Train Loads
(From Boussinesq Equation)

"CLT" (Distance From Centerline of Track in Feet)	Depth (Feet) 0	-2	-4	-6	-8	-10	-12	-14	-16	-18	-20
8	0	0.7	0.846	0.732	0.576	0.439	0.333	0.253	0.195	0.152	0.12
9	0	0.55	0.746	0.703	0.585	0.464	0.363	0.283	0.221	0.175	0.139
10	0	0.44	0.65	0.659	0.579	0.478	0.385	0.307	0.245	0.196	0.158
11	0	0.36	0.565	0.608	0.561	0.482	0.99	0.326	0.265	0.215	0.176
12	0	0.301	0.492	0.556	0.536	0.477	0.406	0.339	0.281	0.232	0.192
14	0	0.218	0.378	0.46	0.475	0.45	0.404	0.352	0.302	0.257	0.218
16	0	0.165	0.297	0.38	0.413	0.411	0.386	0.35	0.311	0.272	0.236
18	0	0.13	0.239	0.315	0.357	0.369	0.36	0.338	0.309	0.278	0.247
20	0	0.104	0.196	0.265	0.309	0.329	0.331	0.319	0.3	0.276	0.251
23	0	0.078	0.15	0.208	0.25	0.276	0.287	0.287	0.279	0.265	0.247
26	0	0.061	0.118	0.166	0.205	0.232	0.248	0.255	0.254	0.247	0.237
29	0	0.049	0.095	0.136	0.17	0.196	0.214	0.224	0.228	0.227	0.222
32	0	0.04	0.078	0.113	0.143	0.167	0.185	0.197	0.205	0.207	0.206
35	0	0.034	0.066	0.095	0.122	0.144	0.161	0.174	0.183	0.188	0.189
39	0	0.027	0.053	0.078	0.1	0.119	0.135	0.148	0.158	0.164	0.168
43	0	0.022	0.044	0.064	0.083	0.1	0.115	0.127	0.137	0.144	0.149
47	0	0.019	0.037	0.054	0.07	0.085	0.098	0.11	0.119	0.127	0.133
51	0	0.016	0.031	0.046	0.06	0.073	0.085	0.095	0.104	0.112	0.118
55	0	0.014	0.027	0.04	0.052	0.063	0.074	0.084	0.092	0.099	0.105

All pressures shown are in kips per sq. ft.
Boxed values represent the maximum pressure ordinate for each value of "CLT".

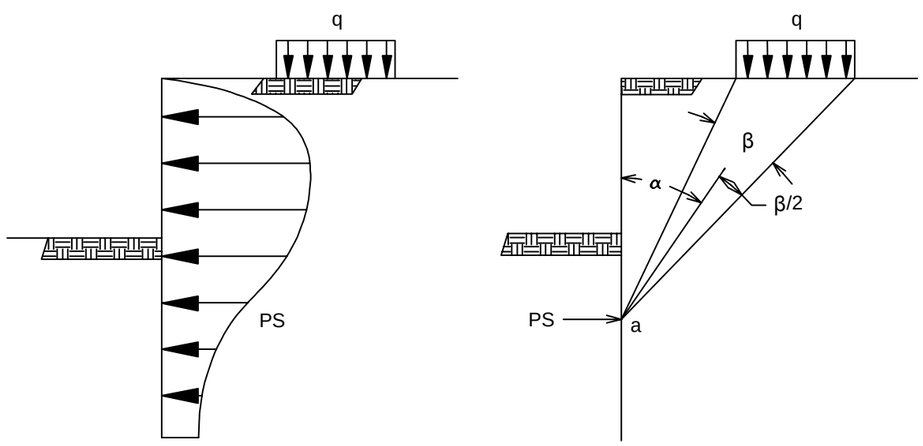

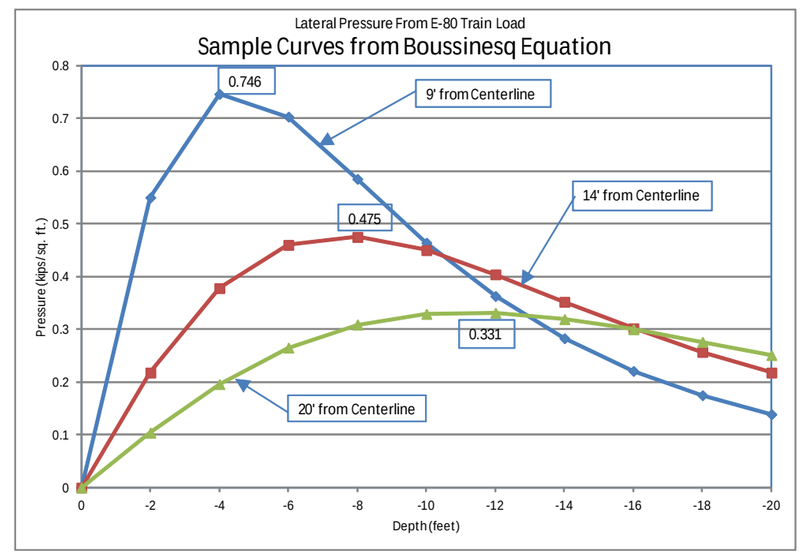

NOTES:

1. TABLE 1 PROVIDES THE RESULTANT LATERAL PRESSURES FOR VARIOUS DEPTHS AND DISTANCES FROM THE CENTERLINE OF TRACK. THREE REPRESENTATIVE PRESSURE CURVES ARE ALSO SHOWN ON THE PROVIDED SAMPLE CURVES FROM BOUSSINESQ EQUATION.

2. FOR A SIMPLIFIED ENGINEERING ANALYSIS, THE RAILROAD LOADING SURCHARGE PRESSURE MAY BE ASSUMED RECTANGULAR WITH WIDTH (P) EQUAL TO 0.8 OF THE MAXIMUM PRESSURE ORDINATE AS GIVEN BY THE APPROPRIATE RAILROAD CURVE.

3. WORK THIS DRAWING WITH PUBLIC PROJECTS MANUAL APPENDIX H, SECTION H.I.6 (OVERHEAD BRIDGE) OR SECTION H.2.8 (UNDERPASS BRIDGE).

REVISIONS		
DATE	LTR.	DESCRIPTION

NORFOLK SOUTHERN®

PUBLIC PROJECTS MANUAL
TYPICAL DRAWINGS

SHORING DESIGN GUIDE
LATERAL PRESSURES FROM
TRAIN LOADS

REF. NO.: SEC 3 - MISC 1

DATE: AUGUST 1, 2015 | DRAWING NO.: 5

Filename: P:\6248\400 - TECHNICAL\433 - PUBLIC PROJECTS MANUAL\STANDARD DRAWINGS\5_SHORING DESIGN GUIDE - LATERAL PRESSURES FROM TRAIN LOADS.DWG

TYPICAL EXAMPLE:

DESIGN SPEED: 60 MPH PASSENGER, INTERMODAL AND TRIPLE CROWN TRAINS
50 MPH FREIGHT TRAINS

HORIZONTAL ALIGNMENT

GIVEN DEGREE OF CURVATURE = 2° 30'

LENGTH OF SPIRAL = 248' (FROM NS STANDARD DRAWING NO. 7)

SUPERELEVATION = 4"

MINIMUM TANGENT DISTANCE BETWEEN REVERSE CURVES = 220'

VERTICAL ALIGNMENT

MAXIMUM GRADE = 1%

FOR MINIMUM CURVE LENGTHS, SEE AREMA CHAPTER 5, SECTION 3.6.

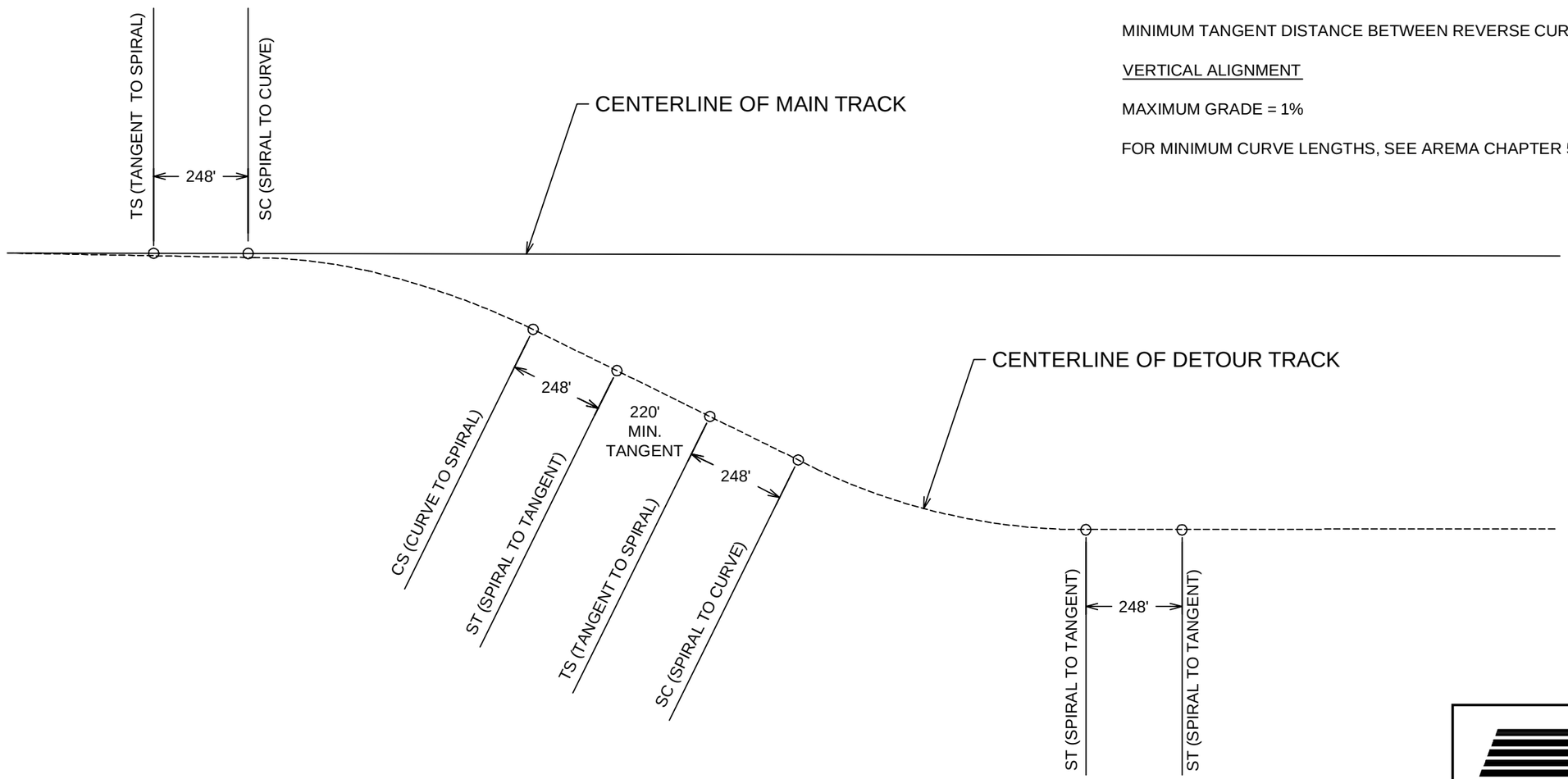

NOTES:

1. ABOVE DATA IS TYPICAL EXAMPLE, SPECIFIC DESIGN MAY VARY DEPENDING ON TIMETABLE SPEED, RULING GRADES AND LOCAL OPERATING CONDITIONS.
2. SEE NS TYPICAL DRAWING NO. 7 FOR SUPERELEVATION CHART.

REVISIONS		
DATE	LTR.	DESCRIPTION
1/15/15	1	REVISED TYP. EX. NOTES

NORFOLK SOUTHERN

PUBLIC PROJECTS MANUAL
TYPICAL DRAWINGS

TRACK DESIGN GUIDE
REVERSE CURVE DIAGRAM

REF. NO.: SEC 2 - UP - 8b

DATE: AUGUST 1, 2015 DRAWING NO.: 6

Filename: P:\6248\400 - TECHNICAL\433 - PUBLIC PROJECTS MANUAL\STANDARD DRAWINGS\6_TRACK DESIGN GUIDE - REVERSE CURVE DIAGRAM.DWG

MAXIMUM SPEED IN MILES PER HOUR		0°-15'	0°-30'	0°-45'	1°-00'	1°-15'	1°-30'	1°-45'	2°-00'	2°-15'	2°-30'	2°-45'	3°-00'	3°-15'	3°-30'	3°-45'	4°-00'	4°-15'	4°-30'	4°-45'	5°-00'	5°-15'	5°-30'	5°-45'	6°-00'	6°-15'	6°-30'	6°-45'	7°-00'	7°-15'	7°-30'	7°-45'	8°-00'	8°-15'	8°-30'	8°-45'	9°-00'	9°-15'	9°-30'	9°-45'	10°-00'	10°-30'	11°-00'	11°-30'	12°-00'	12°-30'	13°-00'	13°-30'	14°-00'	14°-30'	15°-00'	15°-30'	16°-00'	16°-30'	17°-00'	17°-30'	18°-00'	18°-30'	19°-00'	19°-30'	20°-00'
10	P	0	0	0	1"	1"	1"	1"	1"	1"	1"	1"	1"	1"	1"	1"	1"	1"	1"	1"	1"	1"	1"	1"	1"	1"	1"	1"	1"	1"	1"	1"	1"	1"	1"	1"	1"	1"	1"	1"	1"	1"	1"	1"	1"	1"	1"	1"	1"	1"	1"	1"	1"	1"	1"	1"	1"	1"	1"	1"	1"	1"	1"
	F	0	0	0	1"	1"	1"	1"	1"	1"	1"	1"	1"	1"	1"	1"	1"	1"	1"	1"	1"	1"	1"	1"	1"	1"	1"	1"	1"	1"	1"	1"	1"	1"	1"	1"	1"	1"	1"	1"	1"	1"	1"	1"	1"	1"	1"	1"	1"	1"	1"	1"	1"	1"	1"	1"	1"	1"	1"	1"	1"	1"	1"
15	P	0	0	0	1"	1"	1"	1"	1"	1"	1"	1"	1"	1"	1"	1"	1"	1"	1"	1"	1"	1"	1"	1"	1"	1"	1"	1"	1"	1"	1"	1"	1"	1"	1"	1"	1"	1"	1"	1"	1"	1"	1"	1"	1"	1"	1"	1"	1"	1"	1"	1"	1"	1"	1"	1"	1"	1"	1"	1"	1"	1"	1"
	F	0	0	0	1"	1"	1"	1"	1"	1"	1"	1"	1"	1"	1"	1"	1"	1"	1"	1"	1"	1"	1"	1"	1"	1"	1"	1"	1"	1"	1"	1"	1"	1"	1"	1"	1"	1"	1"	1"	1"	1"	1"	1"	1"	1"	1"	1"	1"	1"	1"	1"	1"	1"	1"	1"	1"	1"	1"	1"	1"	1"	1"
20	P	0	0	0	1"	1"	1"	1"	1"	1"	1"	1"	1"	1"	1"	1"	1"	1"	1"	1"	1"	1"	1"	1"	1"	1"	1"	1"	1"	1"	1"	1"	1"	1"	1"	1"	1"	1"	1"	1"	1"	1"	1"	1"	1"	1"	1"	1"	1"	1"	1"	1"	1"	1"	1"	1"	1"	1"	1"	1"	1"	1"	1"
	F	0	0	0	1"	1"	1"	1"	1"	1"	1"	1"	1"	1"	1"	1"	1"	1"	1"	1"	1"	1"	1"	1"	1"	1"	1"	1"	1"	1"	1"	1"	1"	1"	1"	1"	1"	1"	1"	1"	1"	1"	1"	1"	1"	1"	1"	1"	1"	1"	1"	1"	1"	1"	1"	1"	1"	1"	1"	1"	1"	1"	1"
25	P	1"	1"	1"	1"	1"	1"	1"	1"	1"	1"	1"	1"	1"	1"	1"	1"	1"	1"	1"	1"	1"	1"	1"	1"	1"	1"	1"	1"	1"	1"	1"	1"	1"	1"	1"	1"	1"	1"	1"	1"	1"	1"	1"	1"	1"	1"	1"	1"	1"	1"	1"	1"	1"	1"	1"	1"	1"	1"	1"	1"	1"	1"
	F	1"	1"	1"	1"	1"	1"	1"	1"	1"	1"	1"	1"	1"	1"	1"	1"	1"	1"	1"	1"	1 1/2"	1 1/2"	1 1/2"	1 1/2"	1 1/2"	1 1/2"	1 1/2"	1 1/2"	1 1/2"	1 1/2"	1 1/2"	1 1/2"	2"	2"	2"	2"	2 1/2"	2 1/2"	2 1/3"	2 1/2"	2 1/2"	3"	3"	3 1/2"	3 1/2"	3 1/2"	4"	4"													
30	P	1"	1"	1"	1"	1"	1"	1"	1"	1"	1"	1"	1"	1"	1"	1"	1"	1"	1"	1"	1"	1"	1"	1"	1 1/2"	1 1/2"	1 1/2"	1 1/2"	2"	2"	2"	2 1/2"	2 1/2"	2 1/2"	3"	3"	3"	3"	3 1/2"	3 1/2"	3 1/2"	4"																						
	F	1"	1"	1"	1"	1"	1"	1"	1"	1"	1"	1"	1"	1"	1"	1"	1 1/2"	1 1/2"	1 1/2"	1 1/2"	1 1/2"	1 1/2"	1 1/2"	1"	1"	2"	2"	3"	3"	3"	3 1/2"	3 1/2"	3 1/2"	3 1/2"	3 1/2"	3 1/2"	3 1/2"	4"	4"																										
35	P	1"	1"	1"	1"	1"	1"	1"	1"	1"	1"	1"	1"	1"	1"	1"	1"	1"	1"	1 1/2"	2"	2"	2"	2 1/2"	2 1/2"	3"	3"	3"	3 1/2"	3 1/2"	3 1/2"	4"	4"																																
	F	1"	1"	1"	1"	1"	1"	1"	1"	1"	1"	1"	1 1/2"	1 1/2"	1 1/2"	1 1/2"	2"	2"	2"	2 1/2"	2 1/2"	3"	3"	3"	3 1/2"	3 1/2"	3 1/2"	4"	4"																																						
40	P	1"	1"	1"	1"	1"	1"	1"	1"	1"	1"	1"	1"	1 1/2"	1 1/2"	1 1/2"	2"	2 1/2"	2 1/2"	3"	3"	3 1/2"	3 1/2"	4"	4"	4"	4 1/2"	5"	5"																																						
	F	1"	1"	1"	1"	1"	1"	1"	1"	1"	1"	1 1/2"	1 1/2"	2"	2"	2 1/2"	2 1/2"	3"	3 1/2"	3 1/2"	3 1/2"	4"	4"																																										
45	P	1"	1"	1"	1"	1"	1"	1"	1"	1"	1"	1 1/2"	1 1/2"	2"	2 1/2"	2 1/2"	3"	3 1/2"	4"	4"	4 1/2"	5"	5"																																										
	F	1"	1"	1"	1"	1"	1"	1"	1 1/2"	1 1/2"	2"	2"	2 1/2"	3"	3"	3 1/2"	4"	4"																																														
50	P	1"	1"	1"	1"	1"	1"	1"	1"	1 1/2"	2"	2 1/2"	2 1/2"	3"	3 1/2"	4"	4"	4 1/2"	5"																																														
	F	1"	1"	1"	1"	1"	1"	1"	1 1/2"	2"	2 1/2"	3"	3 1/2"	4"	4"																																																
55	P	1"	1"	1"	1"	1"	1"	1 1/2"	1 1/2"	2"	2 1/2"	3"	3 1/2"	4"	4 1/2"	5"																																																
	F	1"	1"	1"	1"	1"	1 1/2"	2"	2 1/2"	3"	3 1/2"	4"																																																		
60	P	1"	1"	1"	1"	1"	1 1/2"	2"	2 1/2"	3"	4"	4"	5"																																																		
	F																																																															
65	P	1"	1"	1"	1"	1 1/2"	2"	2 1/2"	3"	4"	4 1/2"																																																			
	F																																																															
70	P	1"	1"	1"	1"	1 1/2"	2 1/2"	3 1/2"	4"	5"																																																					
	F																																																															
75	P	1"	1"	1"	1 1/2"	2 1/2"	3"	4"	5"																																																						
	F																																																															
80	P	1"	1"	1 1/2"	2"	3"	4"	5"																																																							
	F																																																															
MAXIMUM SPEED IN MILES PER HOUR		0°-15'	0°-30'	0°-45'	1°-00'	1°-15'	1°-30'	1°-45'	2°-00'	2°-15'	2°-30'	2°-45'	3°-00'	3°-15'	3°-30'	3°-45'	4°-00'	4°-15'	4°-30'	4°-45'	5°-00'	5°-15'	5°-30'	5°-45'	6°-00'	6°-15'	6°-30'	6°-45'	7°-00'	7°-15'	7°-30'	7°-45'	8°-00'	8°-15'	8°-30'	8°-45'	9°-00'	9°-15'	9°-30'	9°-45'	10°-00'	10°-30'	11°-00'	11°-30'	12°-00'	12°-30'	13°-00'	13°-30'	14°-00'	14°-30'	15°-00'	15°-30'	16°-00'	16°-30'	17°-00'	17°-30'	18°-00'	18°-30'	19°-00'	19°-30'	20°-00'

P = PASSENGER
F = FREIGHT

APPROACH AND RUNOFF SPIRALS

1. THE LENGTH OF SPIRALS IS TO BE BASED ON THE MAXIMUM ALLOWABLE SPEED OF TRAINS AND WHERE PRACTICAL, SHALL BE SUCH AS TO PERMIT THE ATTAINING OF FULL SUPERELEVATION IN THE LENGTH OF SPIRAL.

2. THE DESIRABLE RATE OF CHANGE IN SUPER ELEVATION IS:
   3/8 INCH IN 31 FEET FOR SPEEDS OVER 60 MPH AND UP TO 80 MPH INCLUSIVE
   1/2 INCH IN 31 FEET FOR SPEEDS UP TO 60 MPH INCLUSIVE.

3. MAXIMUM ACCEPTABLE RATE OF CHANGE IN SUPERELEVATION IS:
   5/8 INCH IN 31 FEET WILL BE PERMITTED FOR SPEED NOT EXCEEDING 40 MPH.
   3/4 INCH IN 31 FEET WILL BE PERMITTED FOR SPEED NOT EXCEEDING 20 MPH.

4. SPIRALS SHALL BE PROVIDED AT BOTH ENDS OF CURVES AND BETWEEN BRANCHES OF COMPOUND CURVES. AN EASEMENT CURVE SHALL BE USED WHICH IS A CUBIC PARABOLA, OR OF THE GENERAL FORM OF A CUBIC PARABOLA, OR OF THE GENERAL FORM OF A CUBIC PARABOLA SUCH AS THE AREMA 10-CHORD SPIRAL.

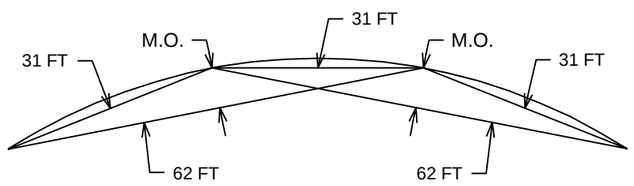

31 FT STATIONS

1. THE DEGREE OF CURVE MAY BE ASCERTAINED BY THE SAME METHOD AS USED FOR STRING LINING:

2. USE THE OUTER RAIL AND DIVIDE INTO STATIONS 31 FT APART ALONG THE GAGE LINE 5/8 INCH BELOW THE TOP OF RAIL.

3. STRETCH A LINE BETWEEN TWO STATIONS WHICH ARE APPROXIMATELY 62 FT APART AND MEASURE THE MIDDLE ORDINATE "M.O." WHICH WILL EQUAL 1 (ONE) INCH FOR EACH 1 (ONE) DEGREE OF CURVE.

NOTES:

1. NS STANDARD DRAWING NO. 7 SHALL BE USED TO DETERMINE THE PROPER ELEVATION FOR CURVES AFTER TAKING INTO ACCOUNT THE DEGREE OF CURVATURE, TYPE OF TRAFFIC, LOCATION, GRADE AND SPEED. LOCAL CONDITIONS ARE IMPORTANT FACTORS WHICH MUST BE CONSIDERED IN MAKING THIS DETERMINATION. ALL EXCEPTIONS SHALL BE APPROVED BY AVP- MAINTENANCE.

2. A PERMANENT RECORD OF THE PROPERTIES OF CURVES, INCLUDING LOCATION, DEGREE OF CURVATURE, DESIGNATED ELEVATION, SPIRAL LENGTHS, CURVE LENGTHS AND MAXIMUM ALLOWABLE OPERATING SPEED SHALL BE MAINTAINED BY THE AVP-MAINTENANCE.

3. WHENEVER A CHANGE IN ALIGNMENT OR PROGRAM BALLASTING IS PROPOSED, THE DIVISION ENGINEER SHALL ESTABLISH THE NEW ALIGNMENT AND ELEVATION PRIOR TO THE BEGINNING OF WORK.

4. THE INNER RAIL SHALL BE MAINTAINED AS THE GRADE RAIL, AND THE DESIGNATED ELEVATION OBTAINED BY RAISING THE OUTER RAIL.

5. ON CURVES WHERE PASSENGER AND FREIGHT TRAINS BOTH OPERATE, THE HIGHER SUPER ELEVATION IS TO BE USED.

6. THE DESIGNATED ELEVATION MUST BE PROVIDED BETWEEN SPIRALS UNLESS PROHIBITED BY PHYSICAL CONDITIONS. IN THAT CASE, THE ELEVATION THAT IS PROVIDED SHALL BE USED TO DETERMINE THE MAXIMUM OPERATING SPEED. WHERE A SPIRAL LENGTH IS TO PROVIDE FOR A FULL RUNOFF, A PORTION OF THE RUNOFF, NOT EXCEEDING ONE INCH MAY BE EXTENDED ON TO TANGENT TRACK.

7. SPECIAL CONDITIONS NOT COVERED BY THESE INSTRUCTIONS SHALL BE REFERRED TO AVP- MAINTENANCE.

8. SPEEDS SHOWN SHALL NOT BE EXCEEDED UNDER ANY CONDITION.

SUPERELEVATION

1. CURVES SHALL BE SUPERELEVATED FOR THE MAXIMUM ALLOWABLE SPEED OF TRAINS IN ACCORDANCE WITH TABLE.

2. THE MAXIMUM SUPERELEVATION SHALL NOT EXCEED 4 INCHES FOR FREIGHT TRAINS UNLESS APPROVED BY AVP-MAINTENANCE.

3. THE MAXIMUM SUPERELEVATION SHALL NOT EXCEED 5 INCHES FOR PASSENGER TRAINS.

4. FOR CURVES UNDER 10°-00', IF THE CURVATURE IS 06 MINUTES HIGHER THAN THE FIGURE LISTED ABOVE, THE NEXT ELEVATION SHALL BE USED; i.e., A 2°-06' CURVE SHALL BE ELEVATED AS IF IT WERE A 2°-15' CURVE.

5. FOR CURVES OVER 10°-00', IF THE CURVATURE IS 11 MINUTES HIGHER THAN THE FIGURE LISTED ABOVE, THE NEXT ELEVATION SHALL BE USED; i.e., A 13°-11' CURVE SHALL BE ELEVATED AS IF IT WERE A 13°-30' CURVE.

REVISIONS		
DATE	LTR.	DESCRIPTION

NORFOLK SOUTHERN

PUBLIC PROJECTS MANUAL
TYPICAL DRAWINGS

TRACK DESIGN GUIDE
CURVE SUPERELEVATION

REF. NO.: SEC 2 - UP - 8c - STD PLAN 7 - 02

DATE: AUGUST 1, 2015 | DRAWING NO.: 7

Filename: P:\6248\400 - TECHNICAL\433 - PUBLIC PROJECTS MANUAL\STANDARD DRAWINGS\7_TRACK DESIGN GUIDE - CURVE SUPERELEVATION.DWG

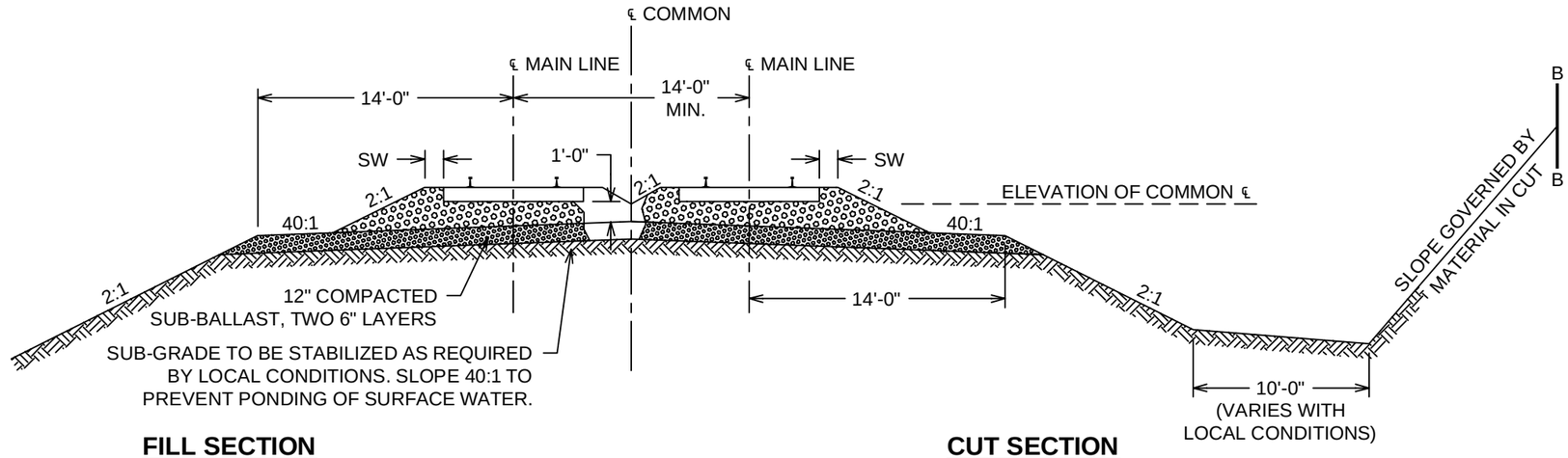

FILL SECTION **CUT SECTION**

DOUBLE TRACK

NTS

SHOULDER WIDTH (SW)

BALLAST WIDTH FROM END OF TIE TO EDGE OF SLOPE

SW	JOINTED RAIL	WELDED RAIL
(INSIDE OF CURVE)	0"	6"
(OUTSIDE OF CURVE)	6"	12"
(TANGENT BOTH SIDES)	0"	6"

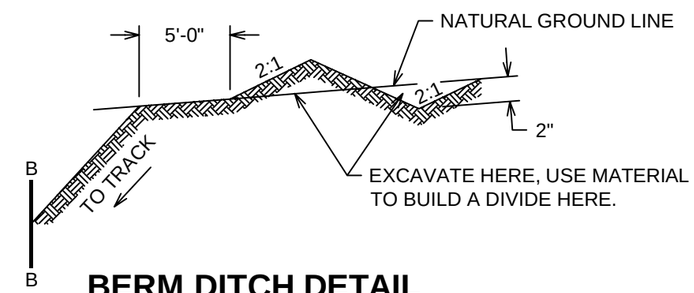

BERM DITCH DETAIL

NTS
(AS REQUIRED)

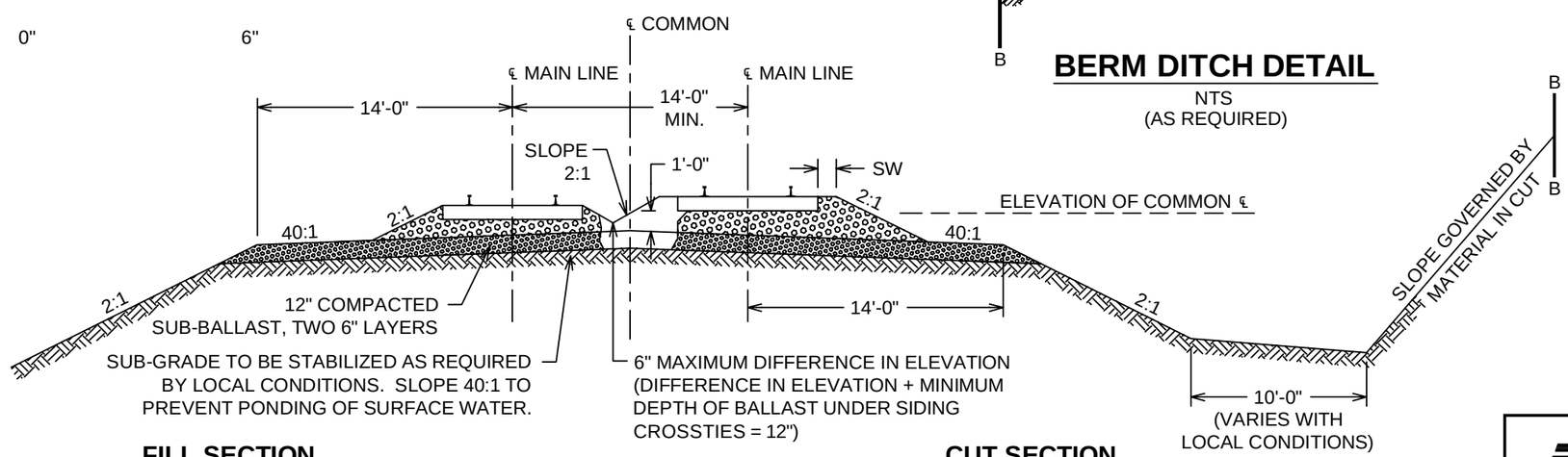

FILL SECTION **CUT SECTION**

SINGLE MAIN TRACK AND PASSING SIDING

NTS

NOTES:

1. SUB-GRADE MAY BE STABILIZED WITH LIME, LIME-FLY ASH, CEMENT, OR STONE.
2. TAMPING OF BALLAST MUST NOT DISTURB COMPACTED SUB-BALLAST.
3. TOP OF SUB-GRADE IS TO BE CROWNED.
4. GRADING SHALL NOT OCCUR WITHIN 9'-0" OF CENTERLINE OF EXISTING MAIN TRACK.

REVISIONS		
DATE	LTR.	DESCRIPTION
1/15/15	1	ADDED NOTE 4

NORFOLK SOUTHERN

PUBLIC PROJECTS MANUAL
TYPICAL DRAWINGS

TRACK DESIGN GUIDE
ROADBED SECTION DOUBLE MAIN

REF. NO.: SEC 2 - UP - 8d - STD PLAN 1-19

DATE: AUGUST 1, 2015 DRAWING NO.: 8

Filename: P:\6248\400 - TECHNICAL\433 - PUBLIC PROJECTS MANUAL\STANDARD DRAWINGS\8_TRACK DESIGN GUIDE - ROADBED SECTION DOUBLE MAIN.DWG

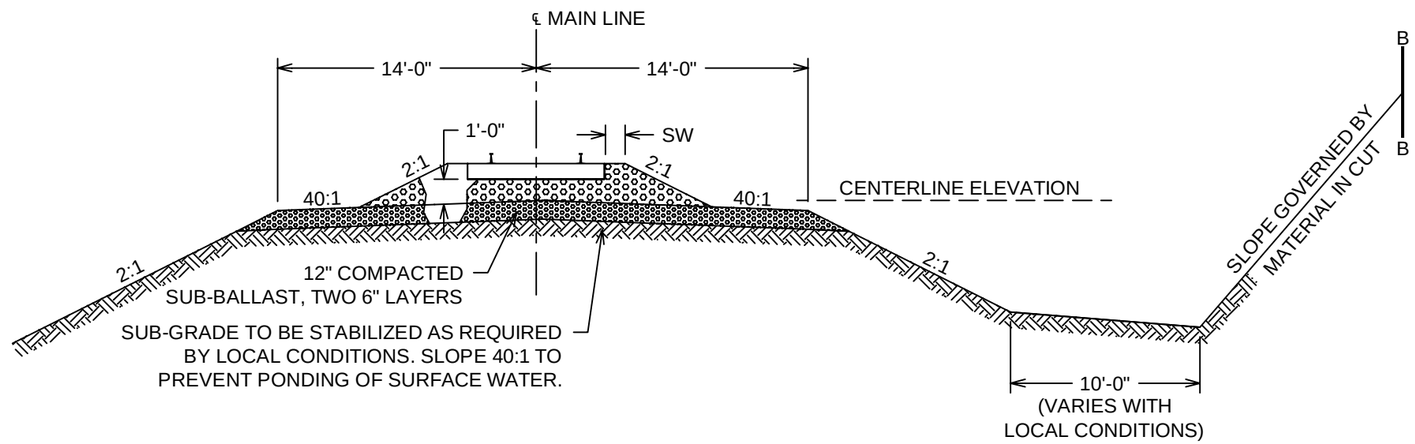

FILL SECTION

CUT SECTION

SINGLE MAIN TRACK

NTS

SHOULDER WIDTH (SW)

BALLAST WIDTH FROM END OF TIE TO EDGE OF SLOPE

SW	JOINTED RAIL	WELDED RAIL
(INSIDE OF CURVE)	0"	6"
(OUTSIDE OF CURVE)	6"	12"
(TANGENT BOTH SIDES)	0"	6"

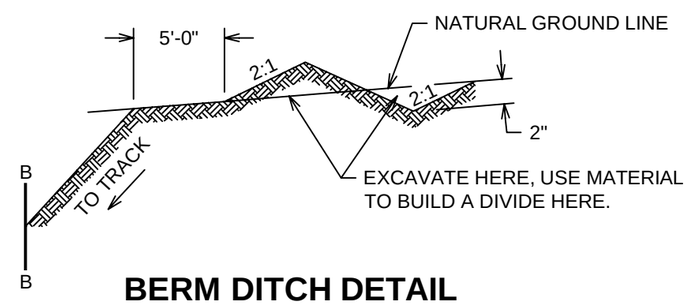

BERM DITCH DETAIL

NTS
(AS REQUIRED)

NOTES:

1. SUB-GRADE MAY BE STABILIZED WITH LIME, LIME-FLY ASH, CEMENT, OR STONE.
2. TAMPING OF BALLAST MUST NOT DISTURB COMPACTED SUB-BALLAST.
3. TOP OF SUB-GRADE IS TO BE CROWNED.

REVISIONS		
DATE	LTR.	DESCRIPTION

NORFOLK SOUTHERN®

PUBLIC PROJECTS MANUAL
TYPICAL DRAWINGS

TRACK DESIGN GUIDE
ROADBED SECTION SINGLE MAIN

REF. NO.: SEC 2 - UP - 8e - STD PLAN 1-20

DATE: AUGUST 1, 2015 | DRAWING NO.: 9

Filename: P:\6248\400 - TECHNICAL\433 - PUBLIC PROJECTS MANUAL\STANDARD DRAWINGS\9_TRACK DESIGN GUIDE - ROADBED SECTION SINGLE MAIN.DWG

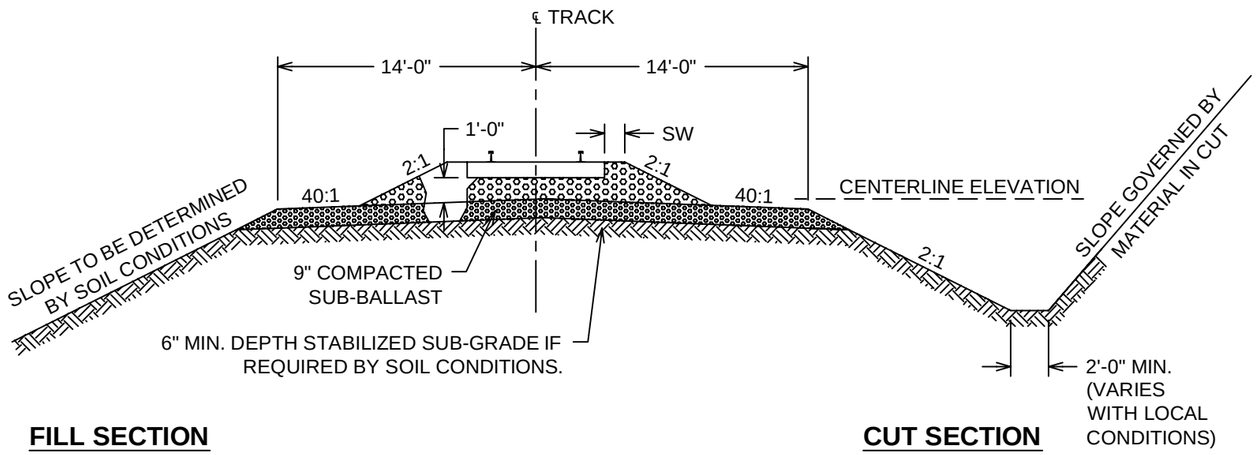

FILL SECTION **CUT SECTION**

HEAVY TONNAGE TRACKS

NTS

SHOULDER WIDTH (SW)

BALLAST WIDTH FROM END OF TIE TO EDGE OF SLOPE

SW	JOINTED RAIL	WELDED RAIL
(INSIDE OF CURVE)	0"	6"
(OUTSIDE OF CURVE)	6"	12"
(TANGENT BOTH SIDES)	0"	6"

NOTES:

1. SUB-GRADE MAY BE STABILIZED WITH LIME, LIME-FLY ASH, CEMENT, OR STONE.
2. TAMPING OF BALLAST MUST NOT DISTURB COMPACTED SUB-BALLAST.
3. TOP OF SUB-GRADE IS TO BE CROWNED.

REVISIONS		
DATE	LTR.	DESCRIPTION

NORFOLK SOUTHERN®

PUBLIC PROJECTS MANUAL
TYPICAL DRAWINGS

TRACK DESIGN GUIDE
ROADBED SECTION HEAVY TONNAGE

REF. NO.: SEC 2 - UP - 8F - STD PLAN 1-21

DATE: AUGUST 1, 2015 DRAWING NO.: 10

Filename: P:\6248\400 - TECHNICAL\433 - PUBLIC PROJECTS MANUAL\STANDARD DRAWINGS\10_TRACK DESIGN GUIDE - ROADBED SECTION HEAVY TONNAGE.DWG

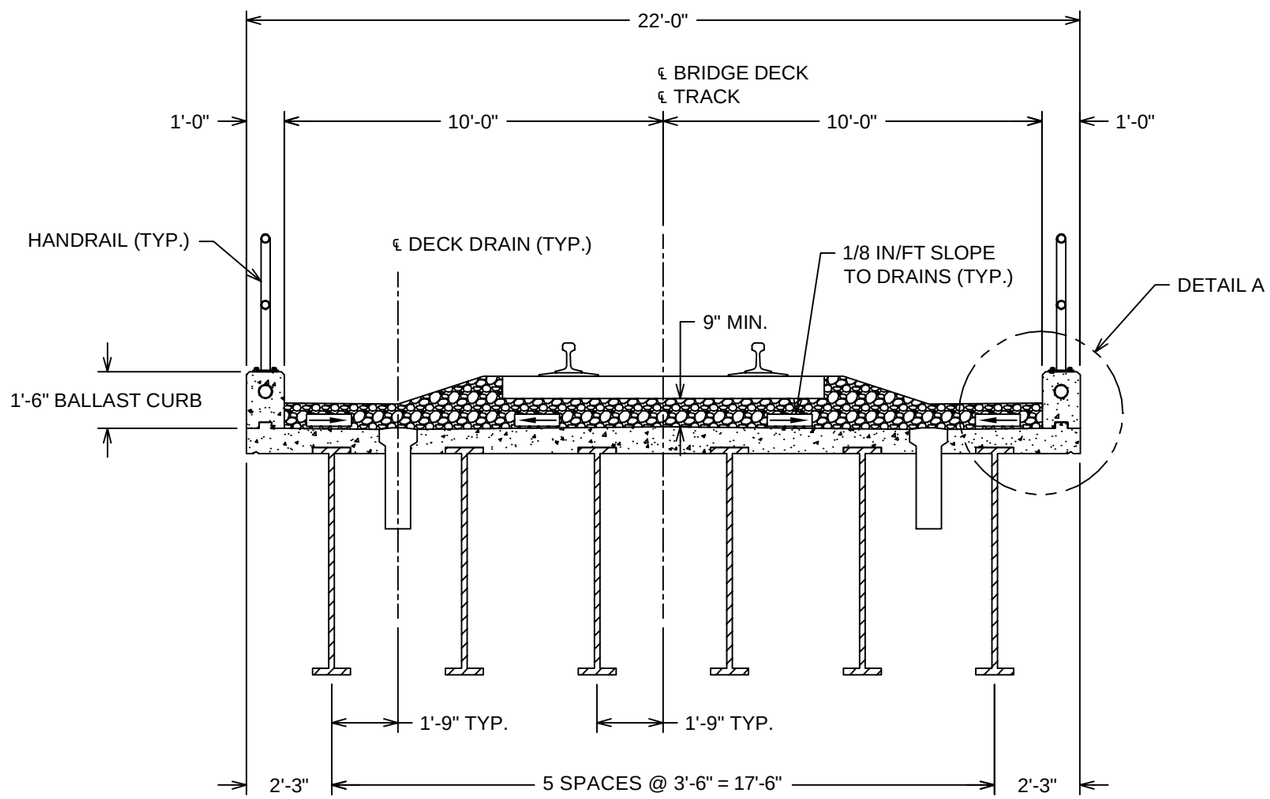

CROSS SECTION

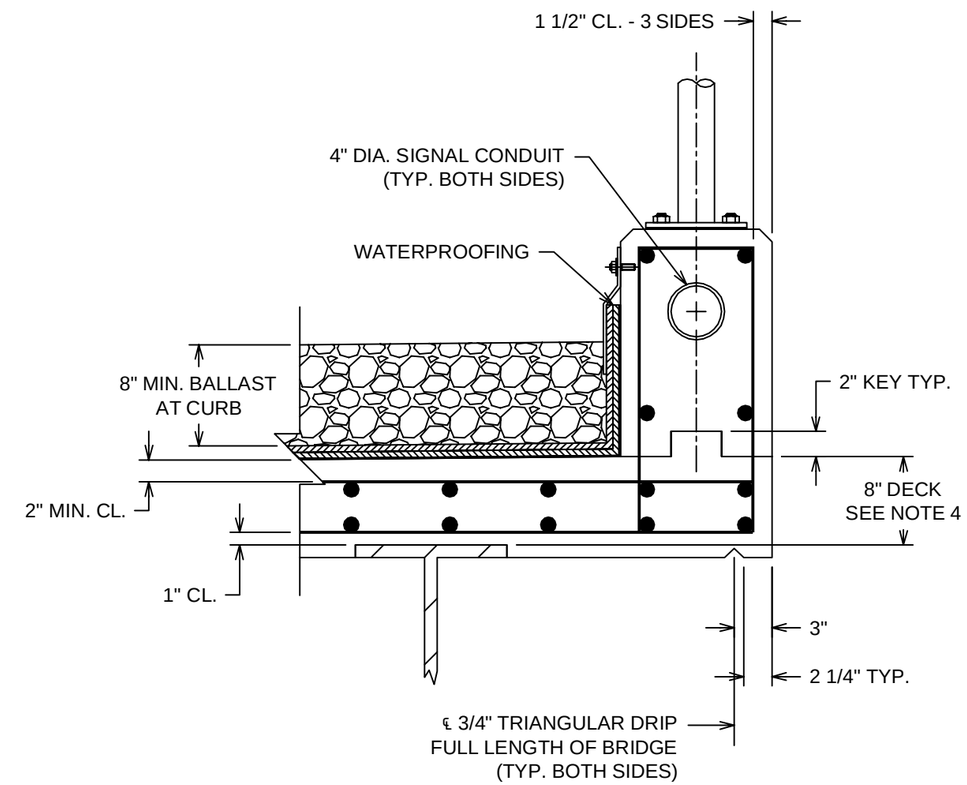

DETAIL A

NOTES:

1. FOR HANDRAIL DETAILS SEE NORFOLK SOUTHERN DRAWING NO. 13.
2. FOR DECK DRAIN DETAILS SEE NORFOLK SOUTHERN DRAWING NO.16 AND 17.
3. FOR WATERPROOFING DETAILS SEE NORFOLK SOUTHERN DRAWING NO. 18.
4. PROVIDE A MINIMUM DECK THICKNESS OF 8" FROM TOP OF FLANGE TO TOP OF DECK DRAIN.

REVISIONS		
DATE	LTR.	DESCRIPTION
9/23/2013	1	REVISE DETAIL A DIMENSIONS AND ADD NOTE 4

NORFOLK SOUTHERN®

PUBLIC PROJECTS MANUAL
TYPICAL DRAWINGS

UNDERPASS BRIDGE DETAILS
TYPICAL CROSS SECTION
SINGLE TRACK

REF. NO.: SEC 2 - UP - 3 - SHT 5

DATE: AUGUST 1, 2015 | DRAWING NO.: 11

Filename: P:\6248\400 - TECHNICAL\433 - PUBLIC PROJECTS MANUAL\STANDARD DRAWINGS\11_UNDERPASS BRIDGE DETAILS - TYPICAL CROSS SECTION SINGLE TRACK.DWG

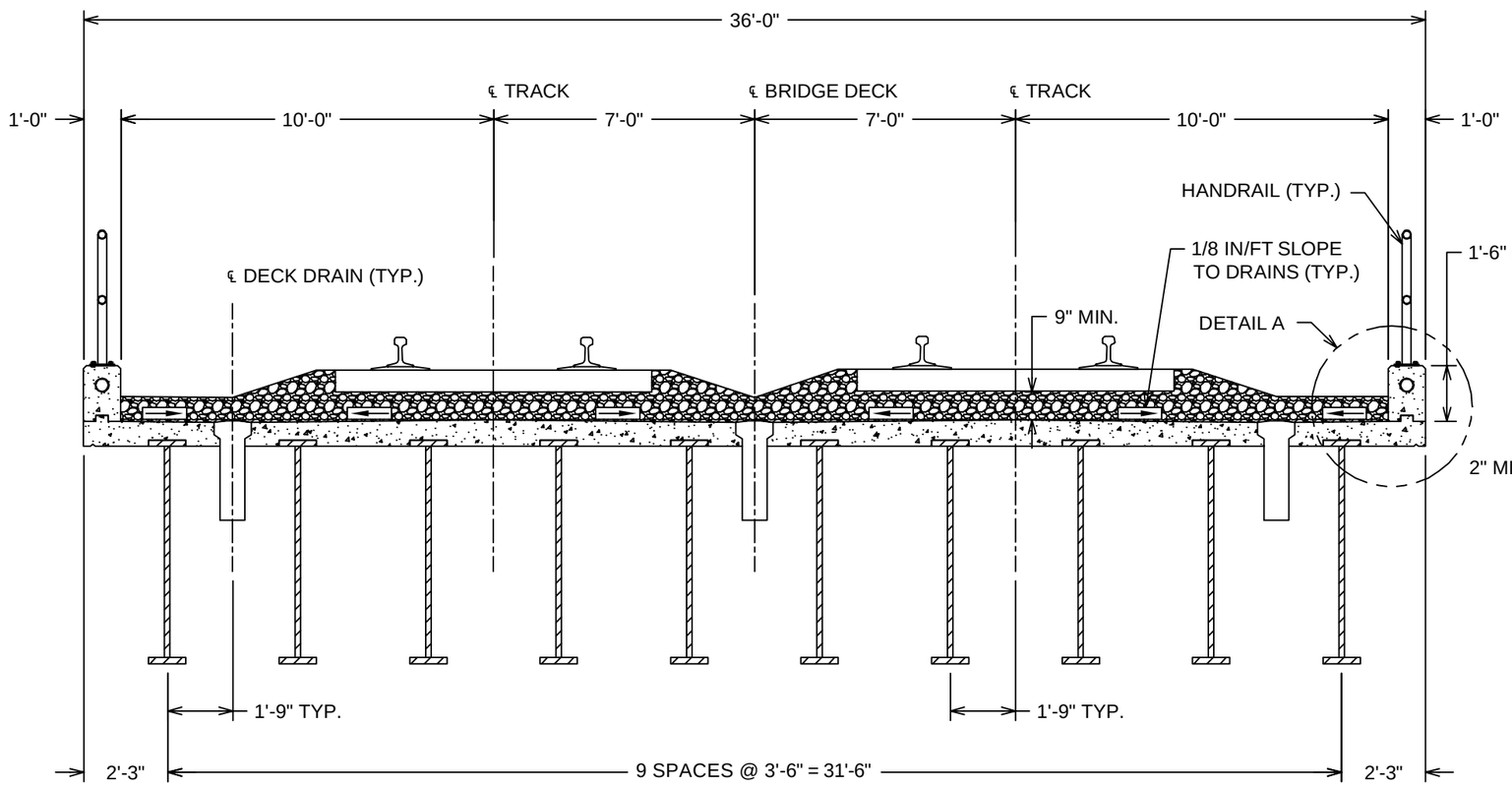

CROSS SECTION

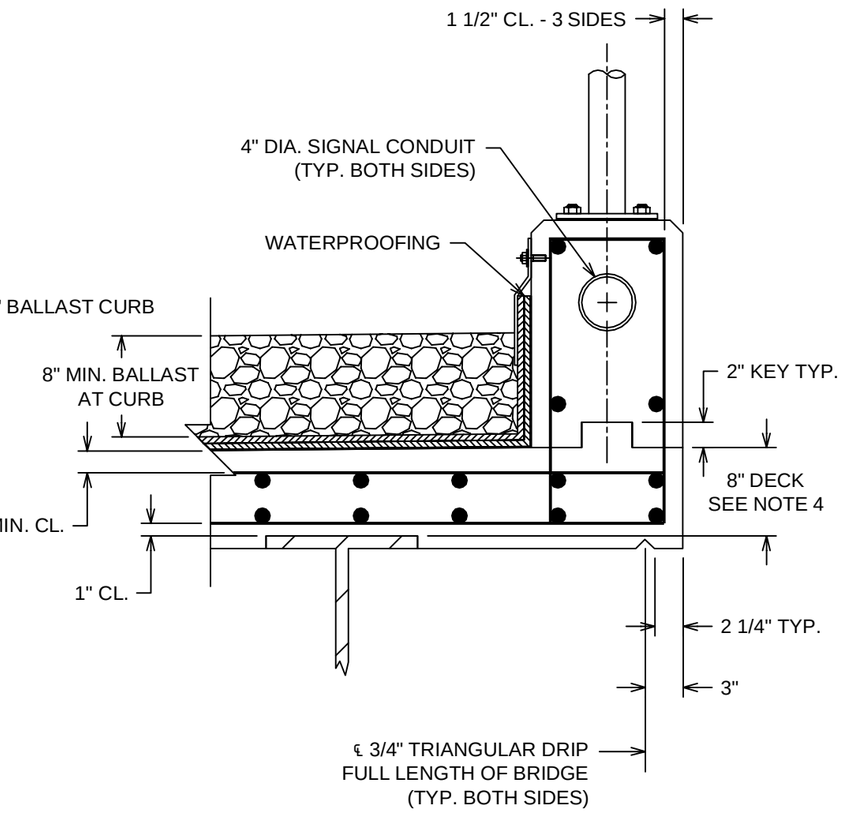

DETAIL A

NOTES:

1. FOR HANDRAIL DETAILS SEE NORFOLK SOUTHERN DRAWING NO. 13.
2. FOR DECK DRAIN DETAILS SEE NORFOLK SOUTHERN DRAWING NO. 16 AND 17.
3. FOR WATERPROOFING DETAILS SEE NORFOLK SOUTHERN DRAWING NO. 18.
4. PROVIDE A MINIMUM DECK THICKNESS OF 8" FROM TOP OF FLANGE TO TOP OF DECK DRAIN.

REVISIONS		
DATE	LTR.	DESCRIPTION
9/23/2013	1	REVISE DETAIL A DIMENSIONS AND ADD NOTE 4

NORFOLK SOUTHERN®

PUBLIC PROJECTS MANUAL
TYPICAL DRAWINGS

UNDERPASS BRIDGE DETAILS
TYPICAL CROSS SECTION
DOUBLE TRACK

REF. NO.: SEC 2 - UP - 3 - SHT 6

DATE: AUGUST 1, 2015 | DRAWING NO.: 12

Filename: P:\6248\400 - TECHNICAL\433 - PUBLIC PROJECTS MANUAL\STANDARD DRAWINGS\12_UNDERPASS BRIDGE DETAILS - TYPICAL CROSS SECTION DOUBLE TRACK.DWG

NOTES:

1. JOINTS IN RAILING (SPLICE GAP) SHALL BE LOCATED IN POST SPACING PLAN.
2. ALUMINUM PIPE TO BE ASTM B429, ALLOY 6061-T6 AND BASE PLATE TO BE ASTM B209, ALLOY 6061-T6.
3. STAINLESS STEEL BOLTS, CAP SCREWS AND NUTS TO BE ASTM A276, TYPE 304, STAINLESS STEEL WASHERS TO BE ASTM A276, TYPE 302.
4. POST TO BE SET PERPENDICULAR TO TOP OF CURB AND RAILS SHALL BE PLACED PARALLEL TO THE GRADE OF THE BRIDGE.
5. CERTIFIED MILL REPORTS ARE REQUIRED FOR RAIL AND POST. SHOP INSPECTIONS ARE NOT REQUIRED.
6. AFTER ANCHOR BOLT NUTS HAVE BEEN TIGHTENED, THREAD SHALL BE NICKED TO LOCK NUTS.
7. CURVED RAIL USAGE: WHERE RAILS ARE TO BE USED ON BRIDGES ON HORIZONTAL AND/OR VERTICAL CURVATURE, THE CONTRACTOR MAY AT HIS OPTION HAVE THE REQUIRED CURVATURE IN THE RAIL FORMED IN THE SHOP OR IN THE FIELD. IN EITHER EVENT, THE RAIL SHALL CONFORM WITHOUT BUCKLING OR KINKING TO THE REQUIRED CURVATURE IN A UNIFORM MANNER ACCEPTABLE TO THE ENGINEER.
8. ANCHOR PLATES SHALL BE STEEL CONFORMING TO ASTM A36.
9. ANCHOR RODS SHALL CONFORM TO ASTM A276, TYPE 302 OR 304 STAINLESS STEEL AND THREADS SHALL BE ROLLED, NOT CUT.
10. UPPER ANCHOR ROD NUTS SHALL BE HEAVY HEX NUTS, PER ASTM A276 TYPE 302 OR 304 STAINLESS STEEL.
11. LOWER ANCHOR ROD NUTS SHALL BE HEAVY STEEL HEX NUTS, PER ASTM A563.
12. THE CENTERLINE OF ANY SPLICE AND/OR EXPANSION JOINT IS TO BE LOCATED AT LEAST 2'-0" AWAY FROM CENTERLINE OF POST. EXPANSION AND/OR SPLICE JOINTS FOR EACH RAIL OF TWO RAILINGS ARE TO BE PLACED IN THE SAME LOCATION AND IN THE SAME PANEL.
13. WELDING SHALL BE IN ACCORDANCE WITH THE CURRENT AWS STRUCTURAL WELDING CODE FOR ALUMINUM.

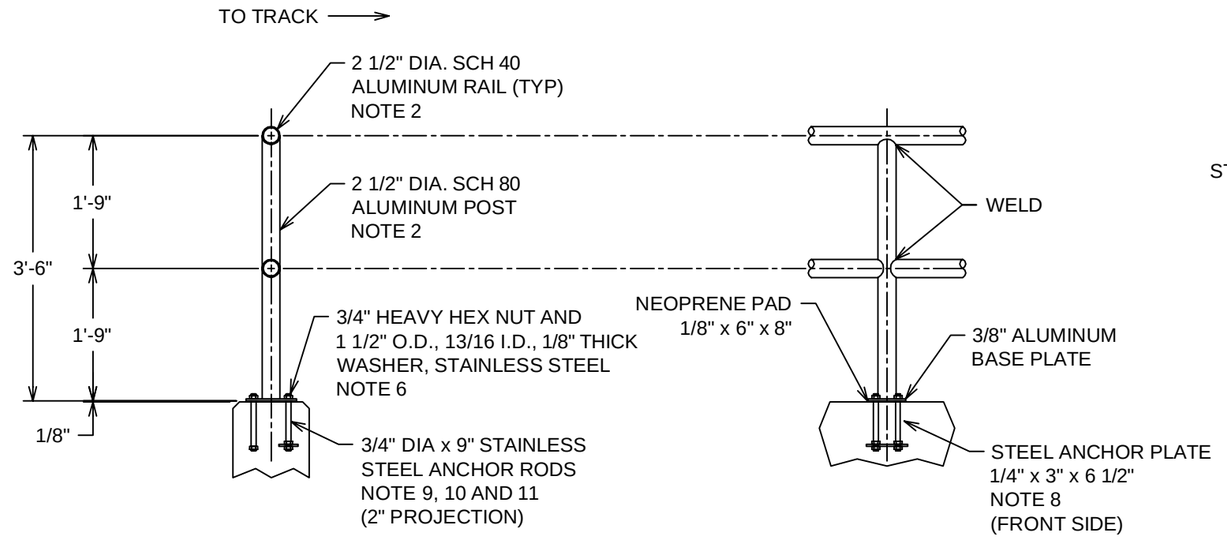

SECTION
NTS

FRONT VIEW
NTS

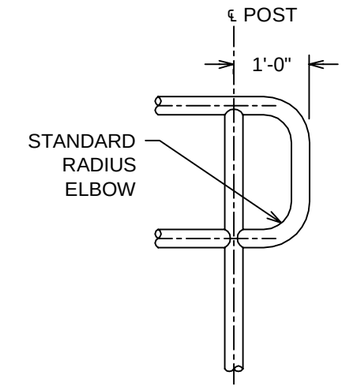

END POST DETAIL
NTS

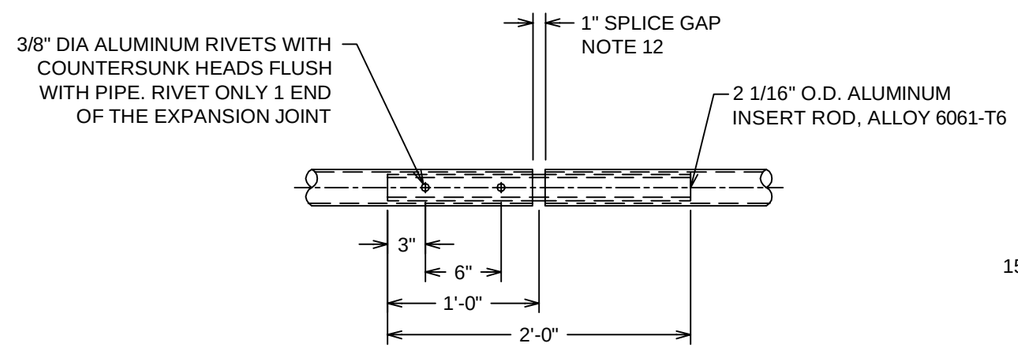

EXPANSION JOINT DETAIL
NTS

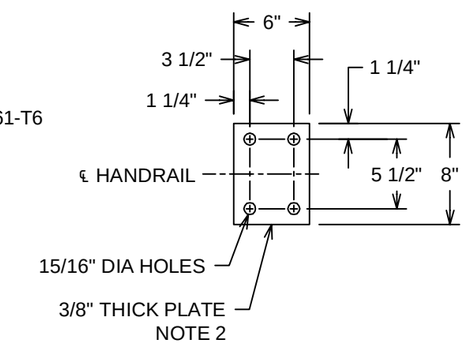

BASE PLATE DETAIL
NTS

REVISIONS		
DATE	LTR.	DESCRIPTION
9/23/2013	1	REVISED NOTE 3 PUNCTUATION

NORFOLK SOUTHERN

PUBLIC PROJECTS MANUAL
TYPICAL DRAWINGS

UNDERPASS BRIDGE DETAILS
HANDRAIL

REF. NO.: SEC 2 - UP - 4 - SHT 7
DATE: AUGUST 1, 2015
DRAWING NO.: 13

Filename: P:\6248\\00 - TECHNICAL\433 - PUBLIC PROJECTS MANUAL\STANDARD DRAWINGS\13_UNDERPASS BRIDGE DETAILS - HAND\RAIL.DWG

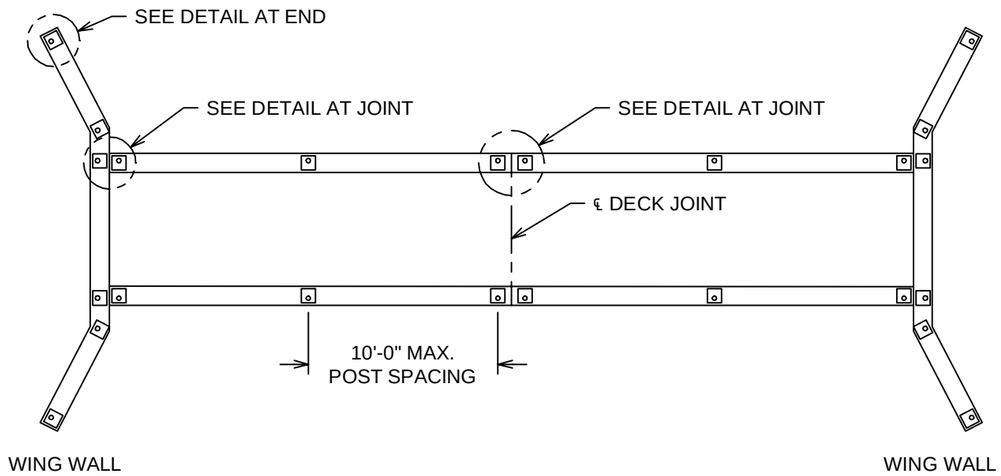

FENCE AND HANDRAIL POST SPACING

NTS

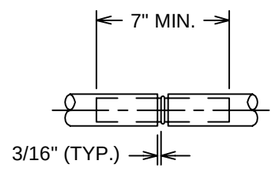

TOP RAIL SLEEVE DETAIL

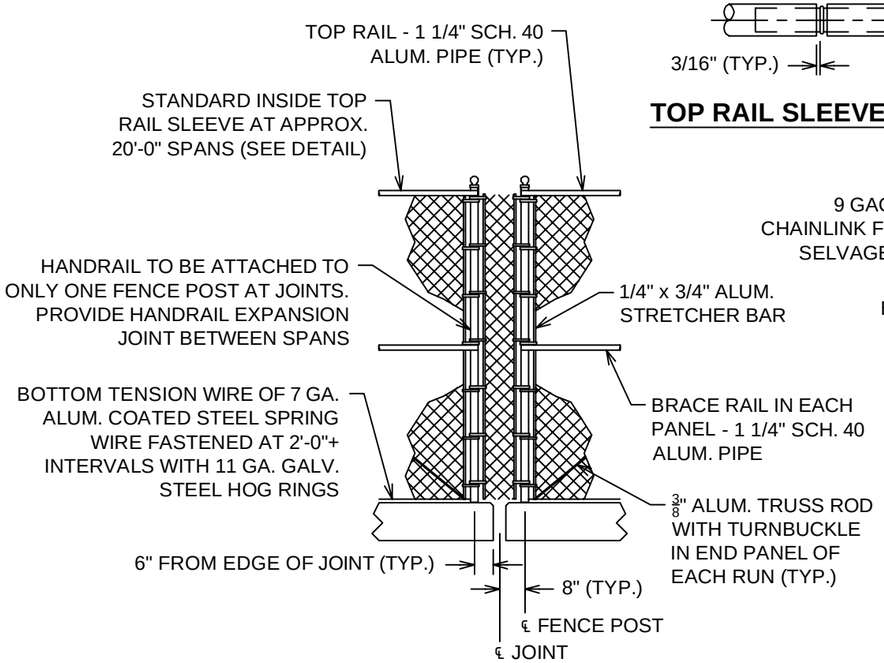

DETAIL AT JOINT

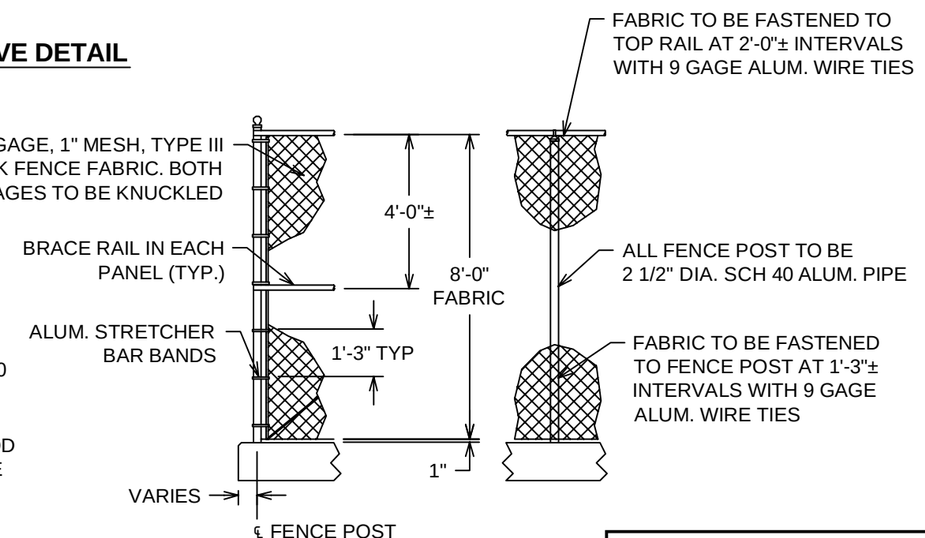

DETAIL AT END

DETAILS FOR CHAIN LINK FENCE

NTS

NOTES:

1. ALUMINUM PIPE TO BE ASTM B24I, ALLOY 6061-T6, ALUMINUM BASE PLATE TO BE ASTM B-209, ALLOY 6061-T6.
2. FENCE FABRIC TO BE TYPE III ALUMINUM ALLOY WIRE ASTM B-211, ALLOY 6061-T89 OR T94.
3. BRACE RAIL AND BRACE ENDS, POST TOPS, TURNBUCKLES, TRUSS RODS, STRETCHER BARS, AND BAR BANDS TO BE IN ACCORDANCE WITH AASHTO M181.
4. STAINLESS STEEL BOLTS, NUTS AND ANCHOR RODS TO BE ASTM A-276, TYPE 304. STAINLESS STEEL WASHERS TO BE ASTM A-276, TYPE 302.
5. POST TO BE SET PERPENDICULAR TO TOP OF CURB AND RAILS SHALL BE PLACED PARALLEL TO THE GRADE OF THE BRIDGE.
6. BOTTOM OF BASE PLATE SHALL BE THOROUGHLY COATED WITH ALUMINUM IMPREGNATED CAULKING COMPOUND OR APPROVED QUALITY.
7. CERTIFIED MILL REPORTS ARE REQUIRED FOR POST, RAIL, AND FENCE FABRIC. SHOP INSPECTION IS NOT REQUIRED.
8. WELDING SHALL BE IN ACCORDANCE WITH THE CURRENT AWS STRUCTURAL WELDING CODE - ALUMINUM.
9. SEE NS TYPICAL DRAWING NO. 15 FOR ADDITIONAL HANDRAIL DETAILS.

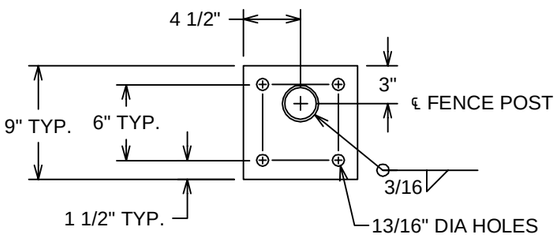

BASE PLATE DETAIL

NTS

REVISIONS		
DATE	LTR.	DESCRIPTION

NORFOLK SOUTHERN

PUBLIC PROJECTS MANUAL
TYPICAL DRAWINGS

UNDERPASS BRIDGE DETAILS
VANDAL FENCING WITH HANDRAIL I

REF. NO.: N/A

DATE: AUGUST 1, 2015 | DRAWING NO.: 14

Filename: P:\6248\400 - TECHNICAL\433 - PUBLIC PROJECTS MANUAL\STANDARD DRAWINGS\14_UNDERPASS BRIDGE DETAILS - VANDAL FENCING WITH HANDRAIL I.DWG

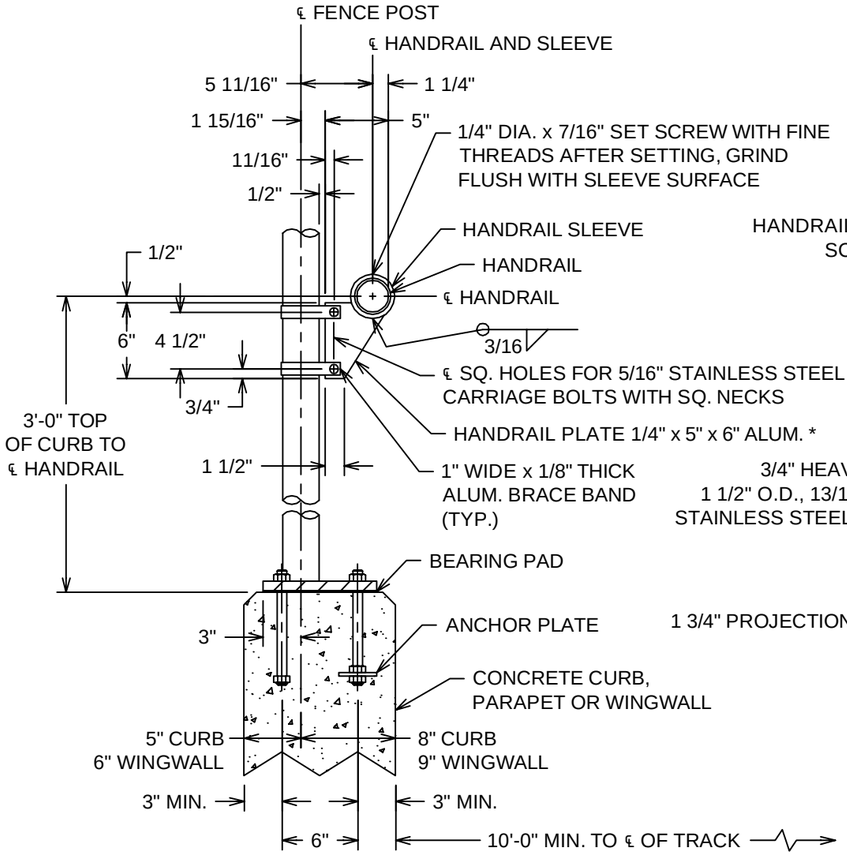

SECTION

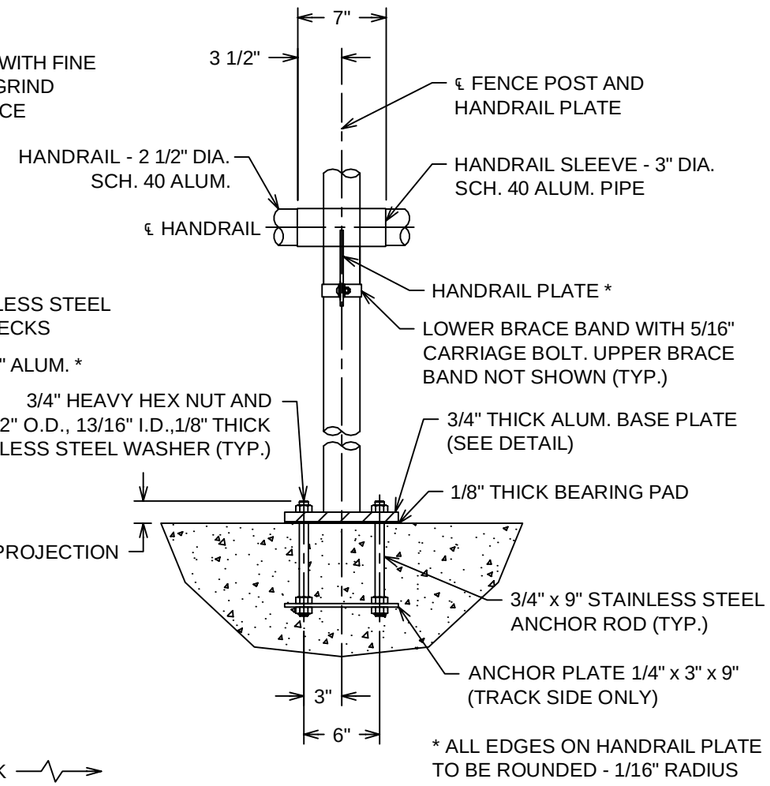

FRONT VIEW

DETAILS FOR PIPE RAILING

NTS

NOTES:

1. JOINT IN HANDRAILING SHALL BE LOCATED IN POST SPACING PLAN.
2. ALL HANDRAIL PIPE, SLEEVES AND EXPANSION JOINTS TO BE SMOOTH AND FREE OF ALL SHARP EDGES.
3. ALUMINUM PIPE TO BE ASTM B241, ALLOY 6061-T6, ALUMINUM CLOSURE PLATE, AND HANDRAIL PLATE TO BE ASTM B-209, ALLOY 6061-T6.
4. STAINLESS STEEL BOLTS, NUTS AND ANCHOR RODS TO BE ASTM A-276, TYPE 304. STAINLESS STEEL WASHERS TO BE ASTM A-276, TYPE 302. ANCHOR ROD THREADS SHALL BE ROLLED, NOT CUT.
5. POST TO BE SET PERPENDICULAR TO TOP OF CURB AND RAILS SHALL BE PLACED PARALLEL TO THE GRADE OF THE BRIDGE.
6. BOTTOM OF BASEPLATE SHALL BE THOROUGHLY COATED WITH ALUMINUM IMPREGNATED CAULKING COMPOUND OR APPROVED QUALITY.
7. CERTIFIED MILL REPORTS ARE REQUIRED FOR POST AND RAIL. SHOP INSPECTION IS NOT REQUIRED.
8. AFTER ANCHOR BOLT AND OTHER BOLT NUTS HAVE BEEN TIGHTENED, THREADS SHALL BE NICKED TO LOCK NUTS.
9. THE ALUMINUM BRACE BANDS USED TO SECURE HANDRAIL SLEEVE SHALL BE OF SUCH SIZE NECESSARY TO CLAMP TIGHTLY TO FENCE POST.
10. WELDING SHALL BE IN ACCORDANCE WITH THE CURRENT AWS STRUCTURAL WELDING CODE - ALUMINUM.
11. ANCHOR PLATE SHALL BE STEEL CONFORMING TO ASTM SPECIFICATION A36.
12. UPPER ANCHOR ROD NUTS SHALL BE HEAVY HEX NUTS, PER ASTM A276 TYPE 302 OR 304 STAINLESS STEEL.
13. LOWER ANCHOR ROD NUTS SHALL BE HEAVY HEX NUTS, PER ASTM A307.

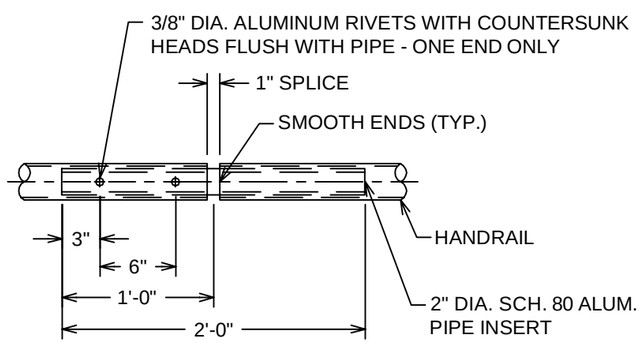

HANDRAIL JOINT DETAIL

NTS

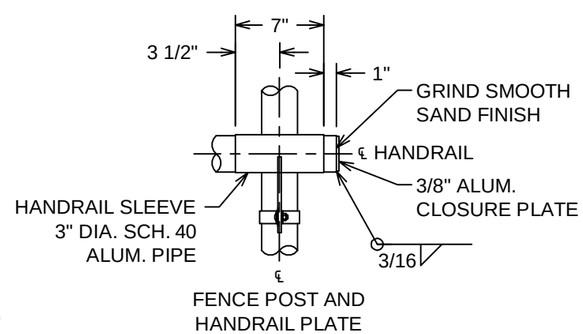

END CLOSURE DETAIL

NTS

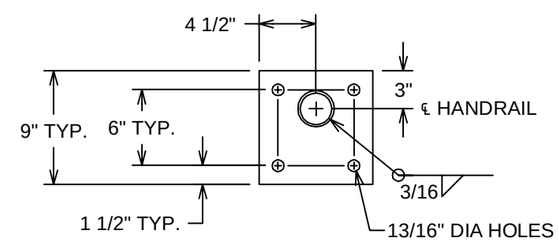

BASE PLATE DETAIL

NTS

REVISIONS		
DATE	LTR.	DESCRIPTION

NORFOLK SOUTHERN

PUBLIC PROJECTS MANUAL
TYPICAL DRAWINGS

UNDERPASS BRIDGE DETAILS
VANDAL FENCING WITH HANDRAIL II

REF. NO.: N/A

DATE: AUGUST 1, 2015

DRAWING NO.: 15

Filename: P:\6248\400 - TECHNICAL\433 - PUBLIC PROJECTS MANUAL\STANDARD DRAWINGS\15_UNDERPASS BRIDGE DETAILS - VANDAL FENCING WITH HANDRAIL II.DWG

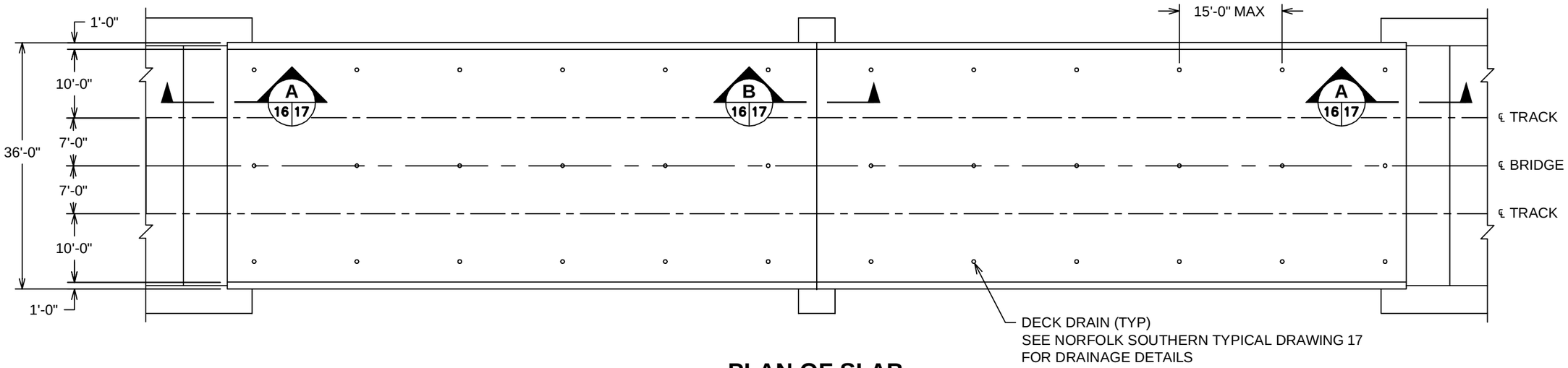

PLAN OF SLAB

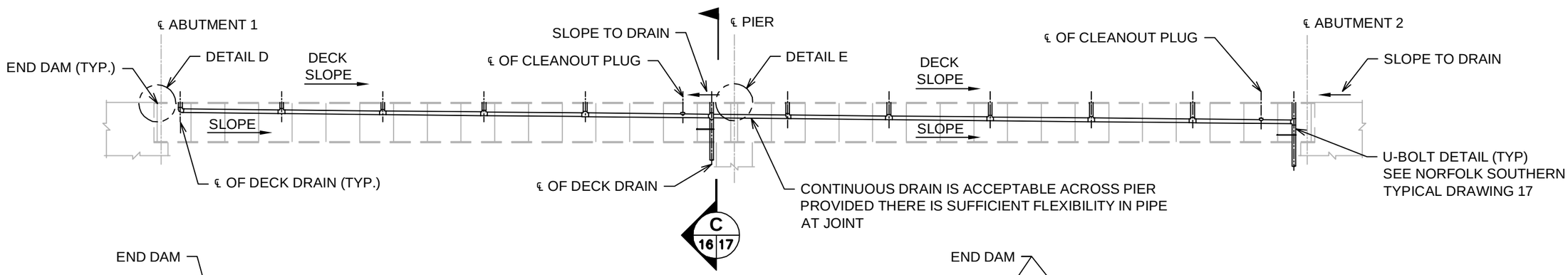

ELEVATION

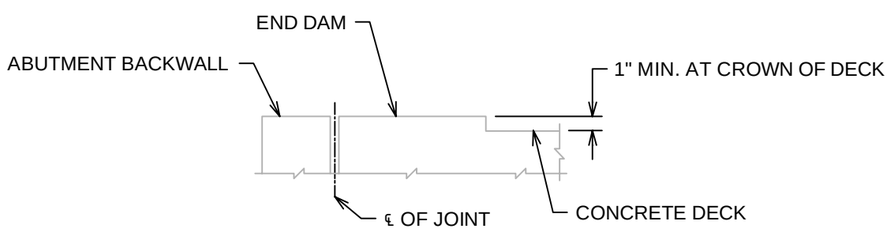

DETAIL D

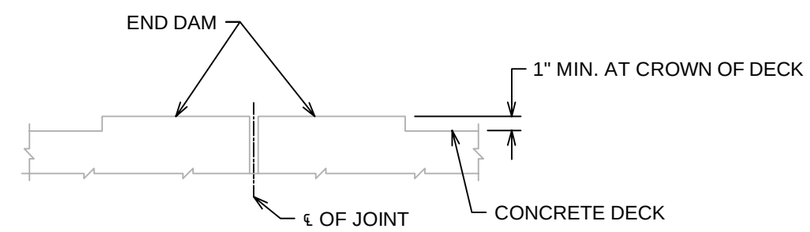

DETAIL E

NOTES:

1. ALL PIPES, TEES, BELLS AND BENDS SHALL BE CLASS 54 DUCTILE IRON.
2. USE MINIMUM 1% FALL ON DRAIN PIPES.
3. PROJECT SPONSORS AND/OR THEIR DESIGNER SHALL PERFORM A DECK DRAINAGE ANALYSIS TO DETERMINE THE ACTUAL REQUIRED SPACING OF DECK DRAINS ALONG THE BRIDGE. MAXIMUM DECK DRAIN SPACING SHALL NOT EXCEED 15'-0".
4. SEE NORFOLK SOUTHERN TYPICAL DRAWING NO. 17 FOR ADDITIONAL DECK DRAINAGE DETAILS.
5. SEE NORFOLK SOUTHERN TYPICAL DRAWING NO. 18 FOR WATERPROOFING DETAILS.

REVISIONS		
DATE	LTR.	DESCRIPTION
9/23/2013	1	REVISE ELEV DRAIN & NOTE 1, ADD DETAIL D & E

NORFOLK SOUTHERN

PUBLIC PROJECTS MANUAL
TYPICAL DRAWINGS

UNDERPASS BRIDGE DETAILS
DECK DRAIN I

REF. NO.: N/A

DATE: AUGUST 1, 2015 | DRAWING NO.: 16

Filename: P:\6248\400 - TECHNICAL\433 - PUBLIC PROJECTS MANUAL\STANDARD DRAWINGS\16_UNDERPASS BRIDGE DETAILS - DECK DRAIN I.DWG

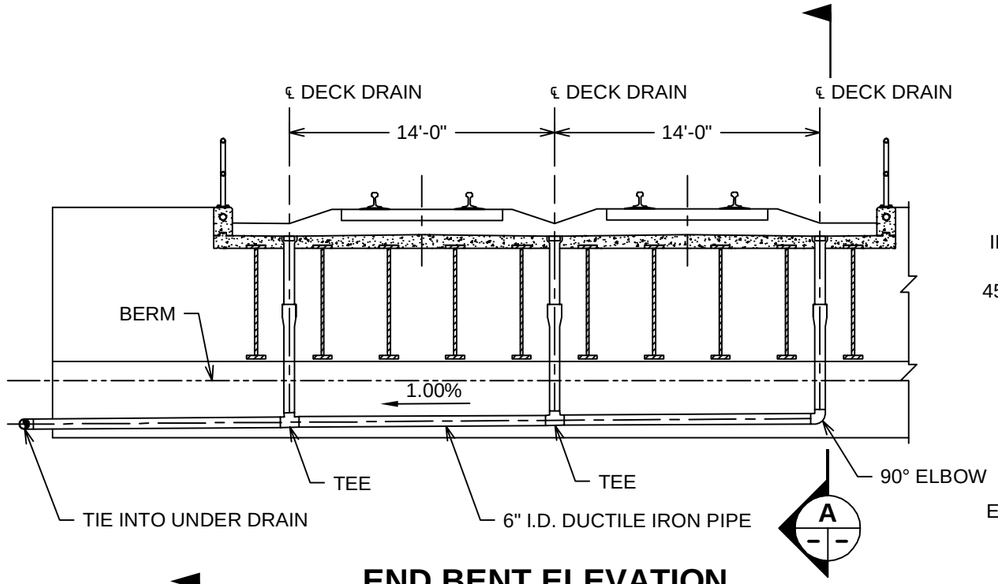

END BENT ELEVATION

(UNDER DRAIN TIE IN OPTION SHOWN)

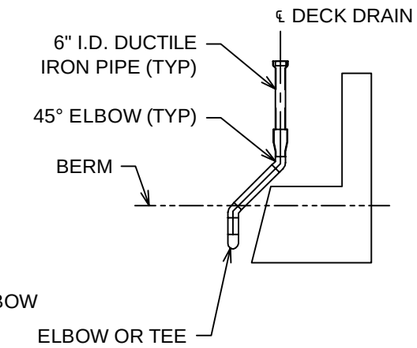

SECTION A

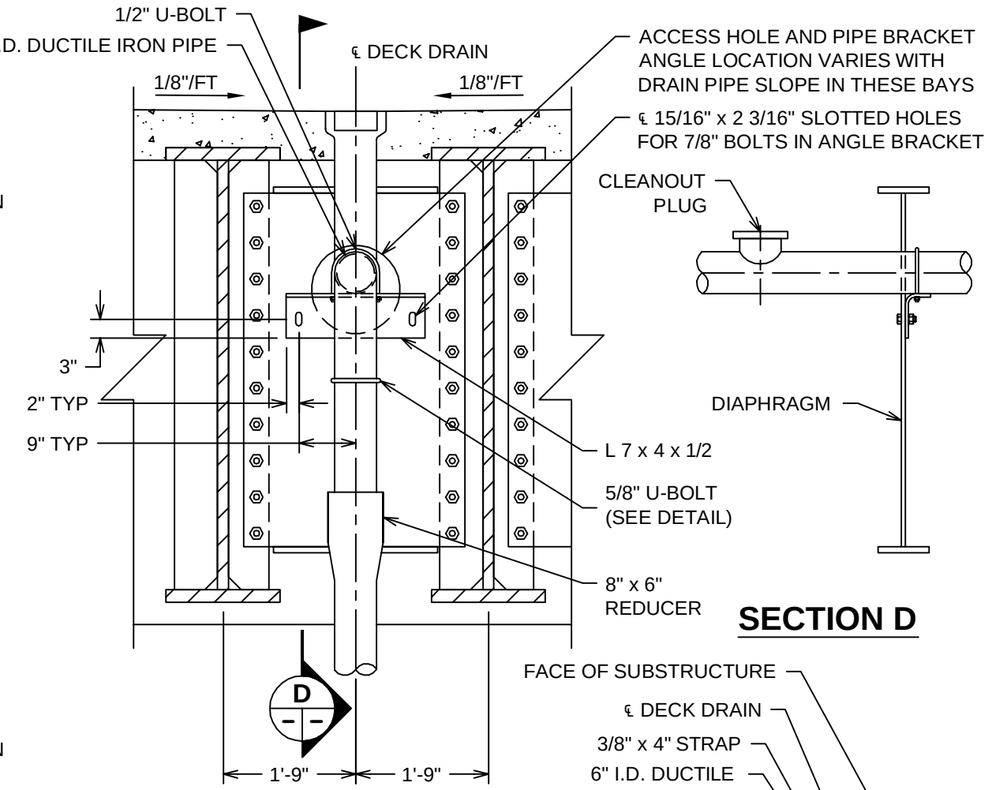

SECTION D

SECTION C

(PIPING DETAIL @ DIAPHRAGM)

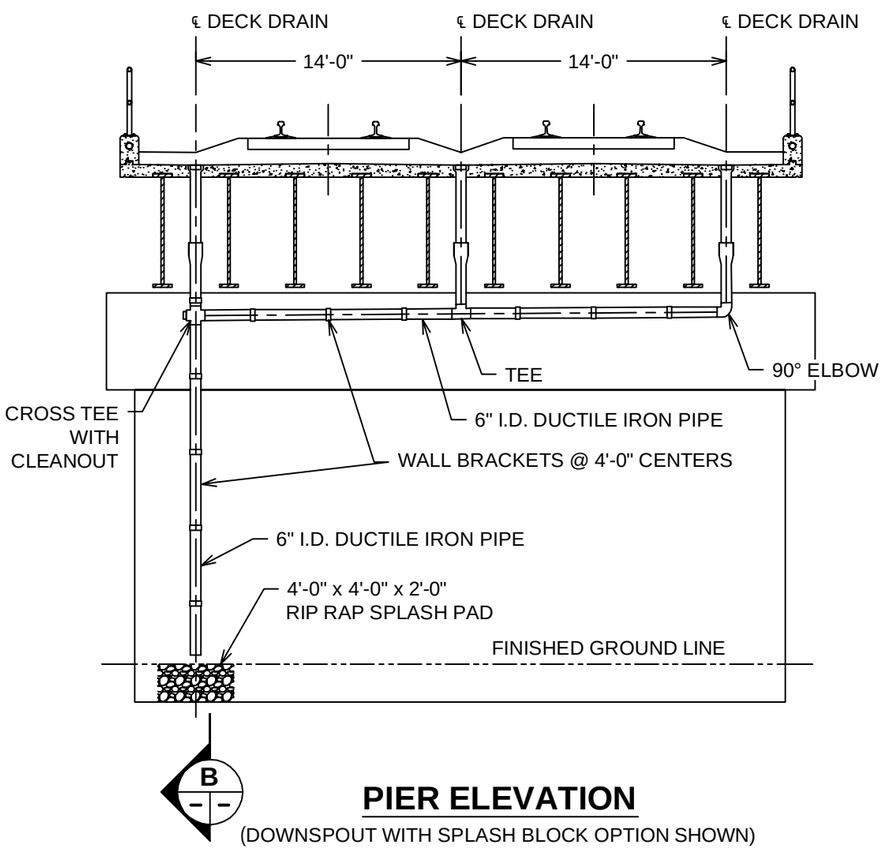

PIER ELEVATION

(DOWNSPOUT WITH SPLASH BLOCK OPTION SHOWN)

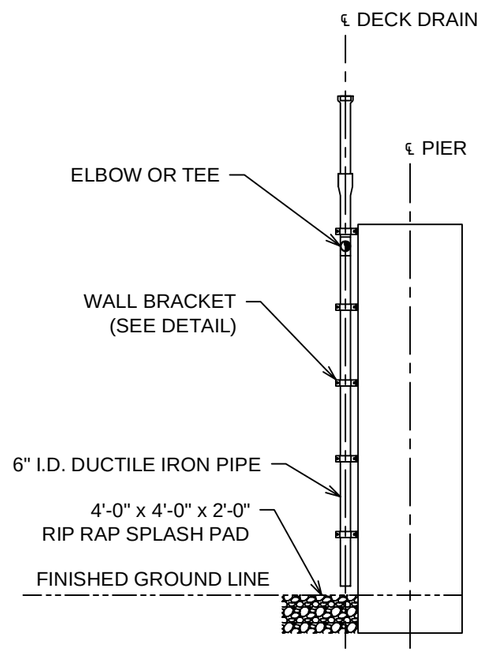

SECTION B

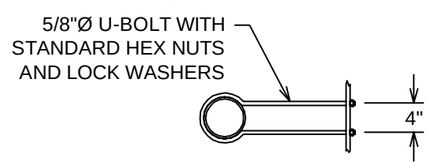

U-BOLT DETAIL

WALL BRACKET DETAIL

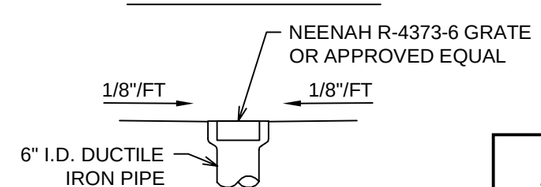

DECK DRAIN DETAIL

REVISIONS		
DATE	LTR.	DESCRIPTION

NORFOLK SOUTHERN

PUBLIC PROJECTS MANUAL
TYPICAL DRAWINGS

UNDERPASS BRIDGE DETAILS
DECK DRAIN II

REF. NO.: N/A

DATE: AUGUST 1, 2015

DRAWING NO.: 17

Filename: P:\6248\400 - TECHNICAL\433 - PUBLIC PROJECTS MANUAL\STANDARD DRAWINGS\17_UNDERPASS BRIDGE DETAILS - DECK DRAIN II.DWG

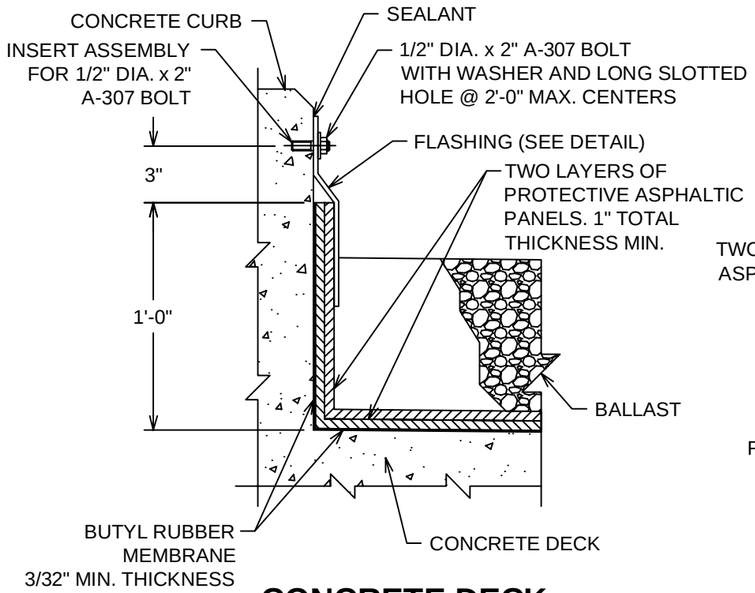

CONCRETE DECK

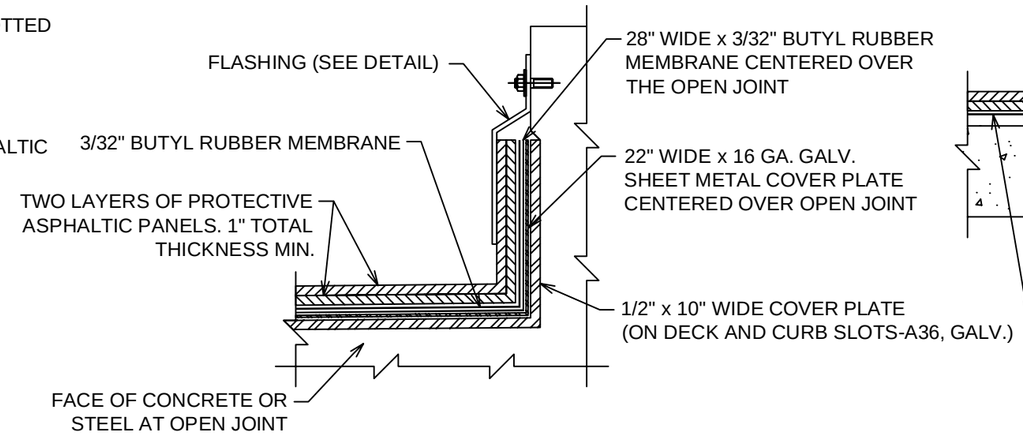

TYPICAL TRANSVERSE SECTION AT OPEN JOINT

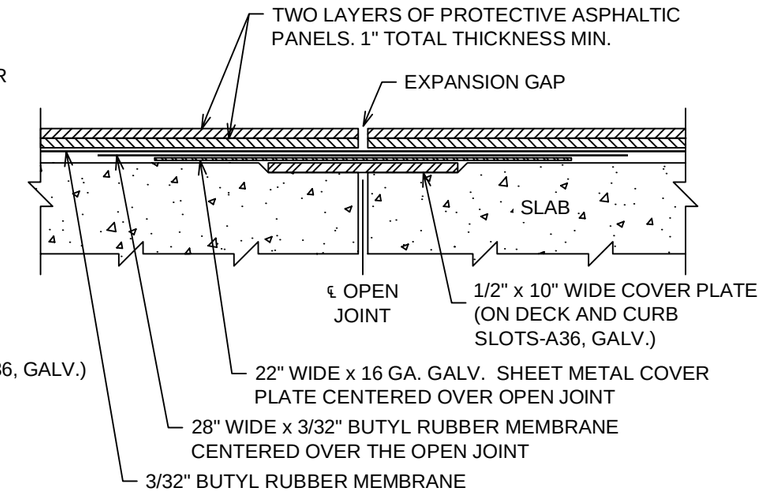

TYPICAL LONGITUDINAL SECTION AT BENTS AND BACKWALL

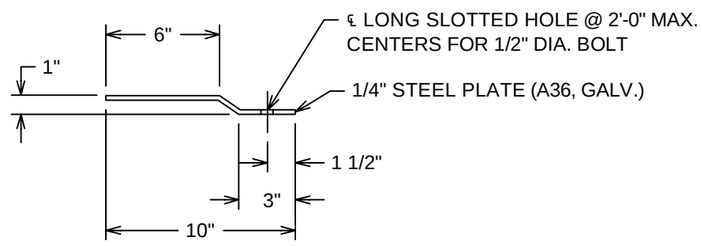

CURB FLASHING DETAIL

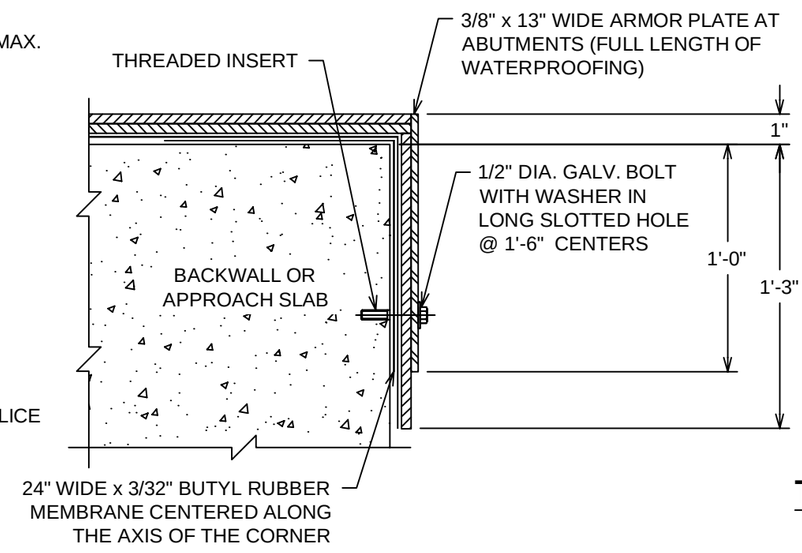

TYPICAL LONGITUDINAL SECTION AT END OF BACKWALL / APPROACH SLABS

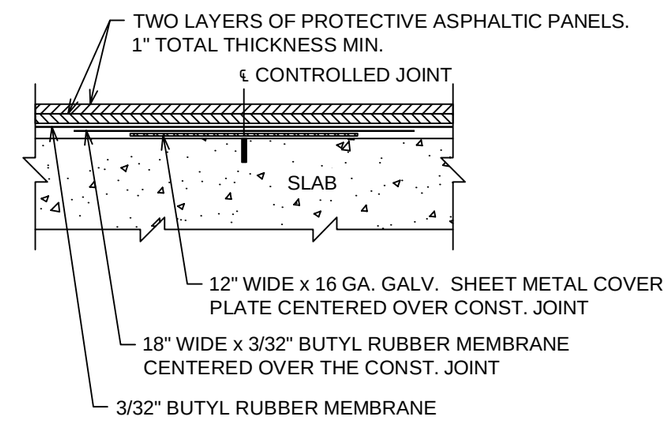

TYPICAL LONGITUDINAL SECTION AT CONTROLLED JOINTS

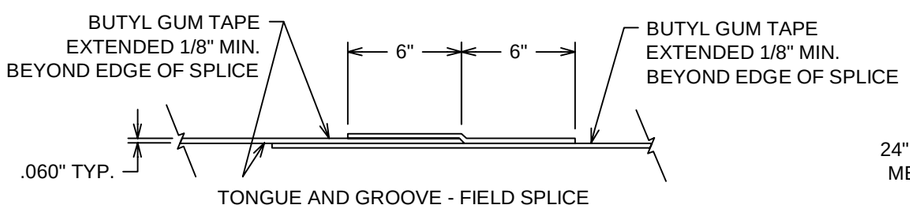

BUTYL RUBBER MEMBRANE SPLICE DETAIL

NOTES:

1. ALL STRUCTURAL STEEL PLATES, BOLTS AND WASHERS SHALL BE GALVANIZED.
2. DISCONTINUE FLASHING OVER PIERS AND ABUTMENTS.
3. WORK DRAWING WITH NORFOLK SOUTHERN SPECIFICATION FOR MEMBRANE WATERPROOFING.
4. ALL DETAILS ARE DRAWN NOT TO SCALE.

REVISIONS		
DATE	LTR.	DESCRIPTION

NORFOLK SOUTHERN®

PUBLIC PROJECTS MANUAL
TYPICAL DRAWINGS

UNDERPASS BRIDGE DETAILS
WATERPROOFING

REF. NO.: N/A

DATE: AUGUST 1, 2015 | DRAWING NO.: 18

Filename: P:\6248\400 - TECHNICAL\433 - PUBLIC PROJECTS MANUAL\STANDARD DRAWINGS\18_UNDERPASS BRIDGE DETAILS - WATERPROOFING DETAIL.DWG

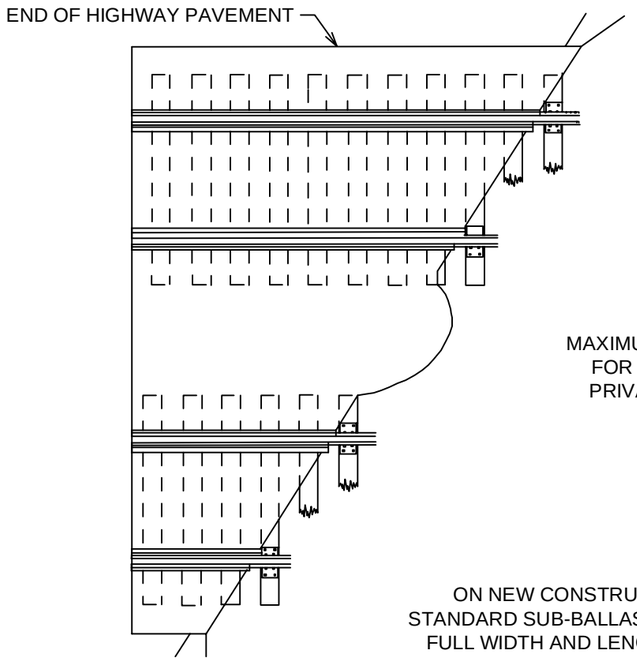

ACUTE ANGLE CROSSING

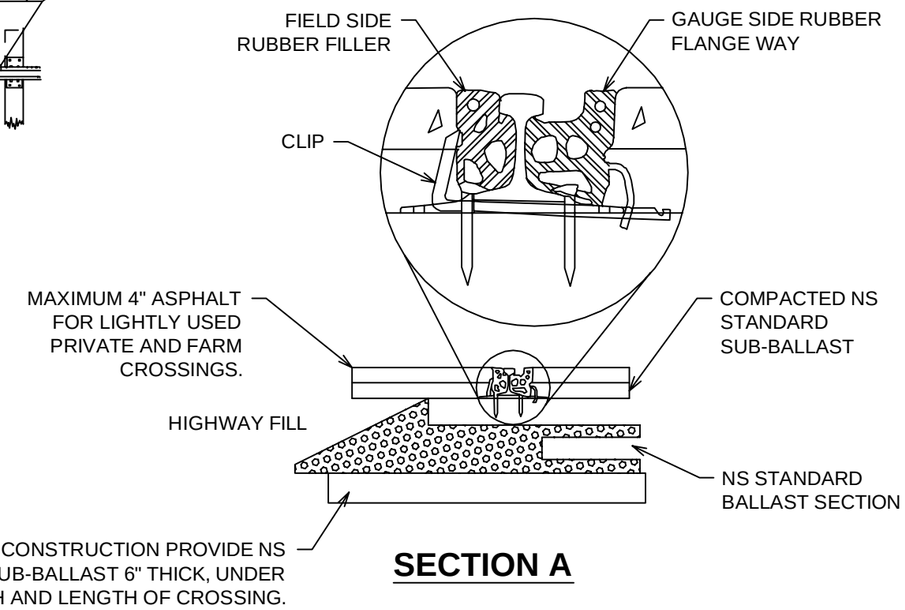

SECTION A

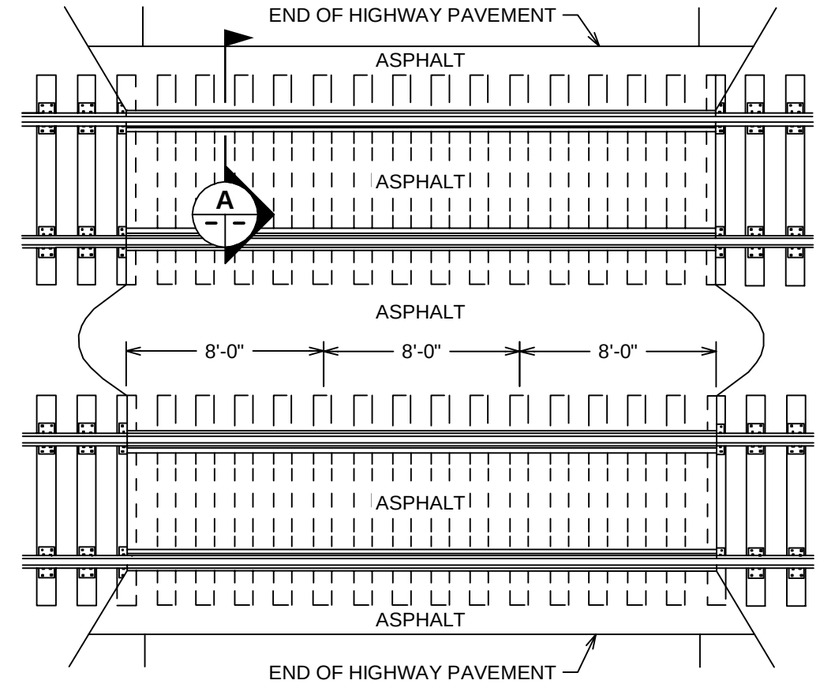

RIGHT ANGLE CROSSING

ALL SPIKES FOR 110# THRU
141# RAIL SHALL BE DRIVEN IN
HOLES AS SHOWN BELOW.

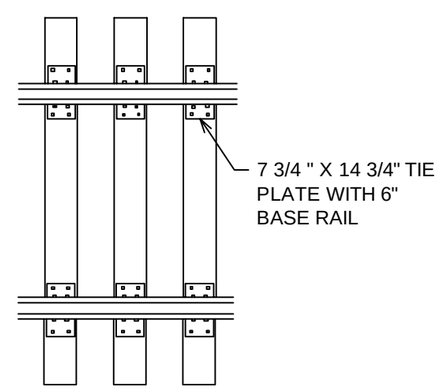

SPIKING PATTERN

PAVING NOTES:

1. PAVEMENT TO BE FULL DEPTH ASPHALT, EXCEPT LIGHTLY USED PRIVATE CROSSINGS AND FARM CROSSINGS. THESE TYPE CROSSINGS ARE TO HAVE COMPACTED NS STANDARD SUB-BALLAST WITH 4" MAXIMUM ASPHALT.
2. WHERE HIGHWAY OR STREET HAVE SEPARATE SIDEWALKS, THE ENTIRE WIDTH OF CROSSING TO THE OUTSIDE EDGE OF SIDEWALK, WILL BE PAVED, WHERE PRACTICAL.
3. WHEN NECESSARY PROVIDE DRAINAGE BETWEEN TRACKS.
4. TO ALLOW FOR COMPACTION OF PAVING UNDER VEHICULAR TRAFFIC, THE SURFACE OF THE ASPHALT PAVING SHALL BE RAISED 3/8" ABOVE THE TOP OF THE RUBBER FLANGE WAYS FOR THE WIDTH OF THE ROADWAY.
5. IN FULL DEPTH CROSSINGS, LAY ASPHALT IN TWO LIFTS.
6. JAM STONE OR ASPHALT UNDER RUBBER FLANGE WAY BETWEEN TIES - BOTH FIELD AND GAUGE SIDES. **FILL ALL VOIDS**.

TIE PLATE NOTES:

1. WORN PLATES MUST BE REPLACED WHEN CROSSING IS RENEWED.
2. STANDARD TIE PLATES TO BE USED FOR 6" BASE RAIL ARE 7 3/4 " X 14 3/4".

RUBBER FLANGE NOTES:

1. CLEAN BASE, WEB AND UNDER THE HEAD OF THE RAIL.
2. FASTEN LENGTHS TOGETHER WITH END CLIPS AND LAY RUBBER AGAINST THE RAIL.
3. INSTALL CLIPS UNDER BOTH RAILS BETWEEN EVERY TIE IN THE CROSSING.
4. RUBBER FLANGE WAY FOR 100-LB RAIL 270 995291
5. RUBBER FLANGE WAY FOR 100RE THROUGH 115RE RAIL 270 991789
6. RUBBER FLANGE WAY FOR 132RE THROUGH 141AB RAIL 270 008791

(INCLUDES ALL HARDWARE AND IS FURNISHED IN 8 TRACK FOOT SECTIONS.)

REVISIONS		
DATE	LTR.	DESCRIPTION

NORFOLK SOUTHERN®

PUBLIC PROJECTS MANUAL
TYPICAL DRAWINGS

AT-GRADE CROSSING DETAILS
ASPHALT PAVING WITH RUBBER FLANGE WAY

REF. NO.: PLAN 7-5B

DATE: AUGUST 1, 2015 DRAWING NO.: 19

Filename: P:\6248\400 - TECHNICAL\433 - PUBLIC PROJECTS MANUAL\STANDARD DRAWINGS\19_AT-GRADE CROSSING DETAILS - ASPHALT PAVING WITH RUBBER FLANGE WAY.DWG

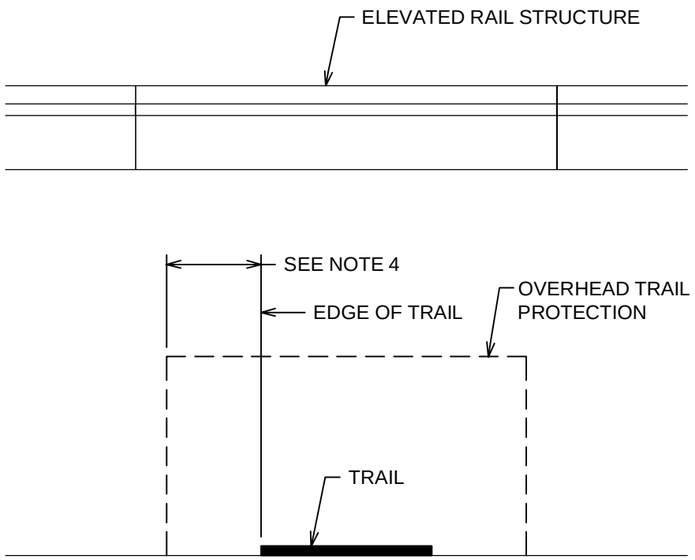

ELEVATION

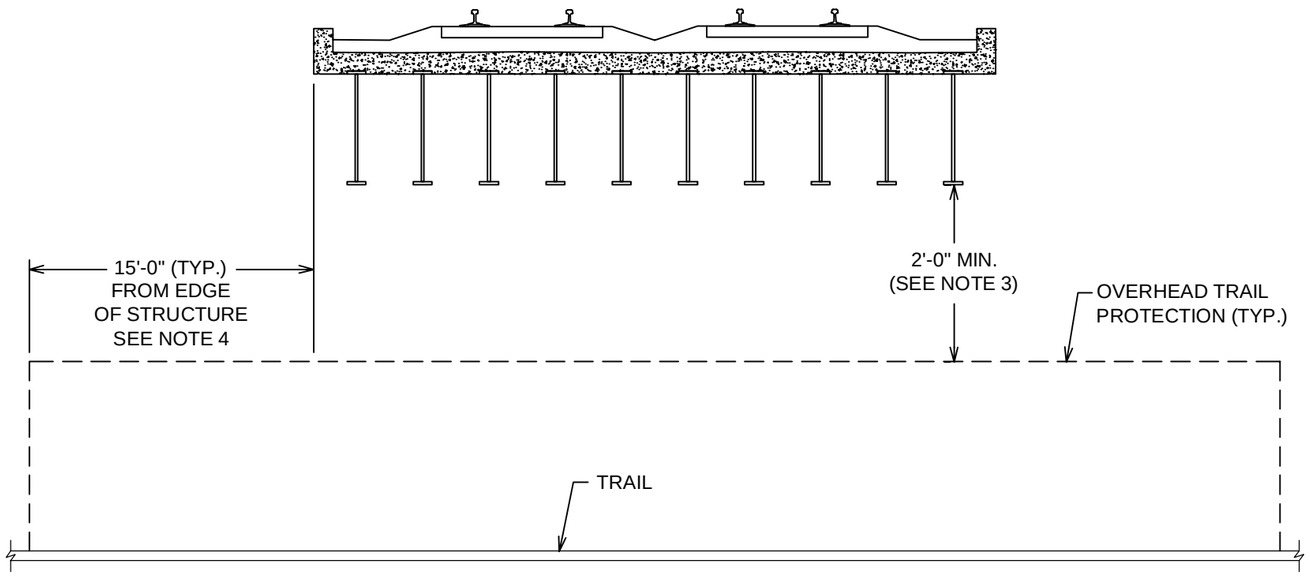

SECTION

NOTES:

1. THIS DRAWING SHALL BE USED AS A REFERENCE ONLY. PROJECT SPONSOR AND / OR THEIR DESIGNER SHALL BE RESPONSIBLE FOR DESIGN OF OVERHEAD TRAIL PROTECTION, IN ACCORDANCE WITH ALL APPLICABLE STANDARDS.
2. OVERHEAD TRAIL PROTECTION SHALL BE DESIGNED FOR A MINIMUM LOAD OF 50 POUNDS DROPPED FROM THE ELEVATED RAIL STRUCTURE.
3. FOR ACCESS AND INSPECTION, A MINIMUM CLEAR DISTANCE OF 2'-0" SHALL BE PROVIDED BETWEEN THE LOWEST EXTENSION OF THE ELEVATED STRUCTURE AND THE OVERHEAD TRAIL PROTECTION.
4. THE OVERHEAD TRAIL PROTECTION SHALL EXTEND THE ENTIRE LENGTH OF THE ELEVATED RAIL STRUCTURE WITHIN THE RIGHT OF WAY, OR 15'-0", WHICHEVER IS GREATER.

REVISIONS		
DATE	LTR.	DESCRIPTION
9/23/2013	1	REVISE SECTION DIMENSION AND NOTE 4

NORFOLK SOUTHERN®

PUBLIC PROJECTS MANUAL
TYPICAL DRAWINGS

OVERHEAD PROTECTION FOR TRAILS UNDER NORFOLK SOUTHERN

REF. NO.: N/A

DATE: AUGUST 1, 2015

DRAWING NO.: 20

Filename: P:\6248\400 - TECHNICAL\433 - PUBLIC PROJECTS MANUAL\STANDARD DRAWINGS\20_OVERHEAD PROTECTION FOR TRAILS UNDER NORFOLK SOUTHERN.DWG

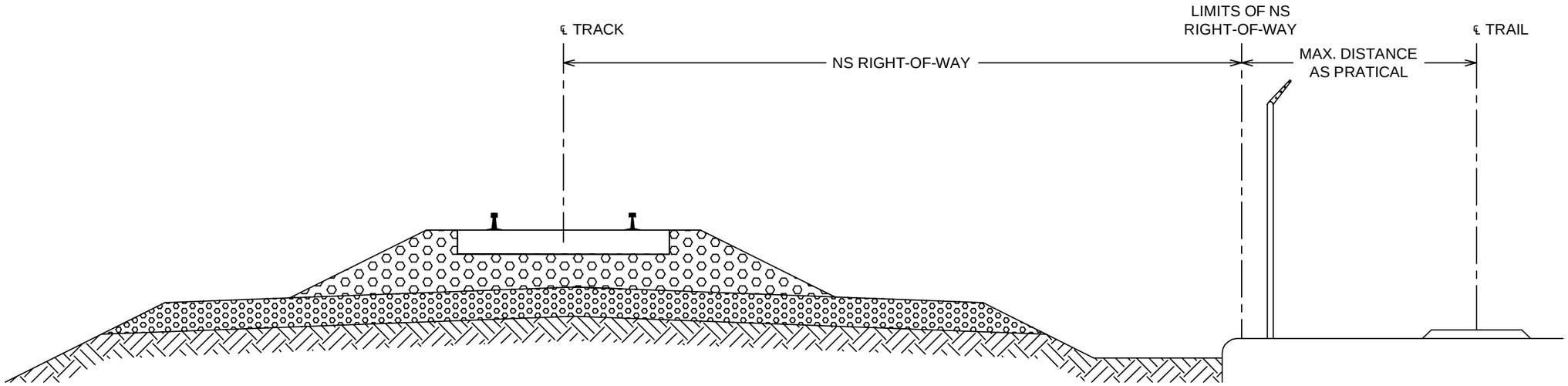

TYPICAL SECTION

NTS

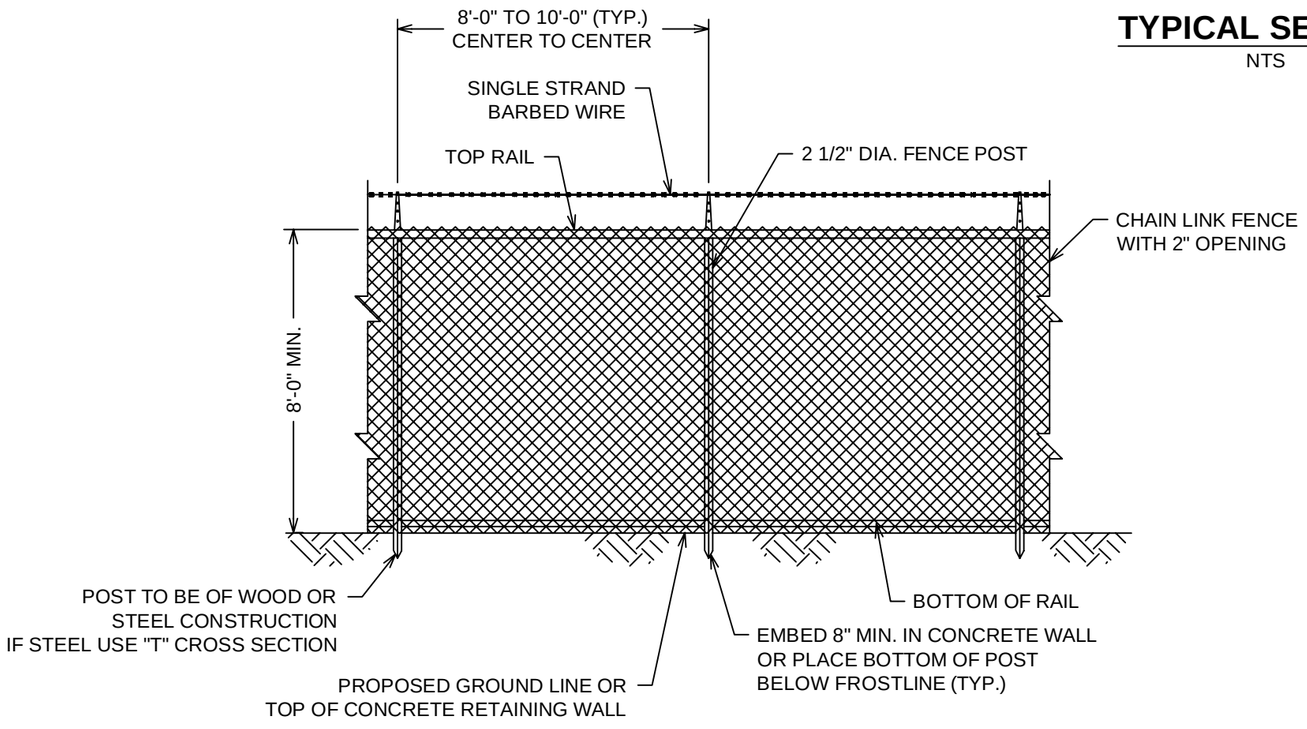

CHAIN LINK FENCE ELEVATION

NTS

REVISIONS		
DATE	LTR.	DESCRIPTION

NORFOLK SOUTHERN®

PUBLIC PROJECTS MANUAL
TYPICAL DRAWINGS

RIGHT-OF-WAY FENCING

REF. NO.: N/A

DATE: AUGUST 1, 2015 | DRAWING NO.: 21

Filename: P:\6248\400 - TECHNICAL\433 - PUBLIC PROJECTS MANUAL\STANDARD DRAWINGS\21_RIGHT-OF-WAY FENCING DETAILS.DWG

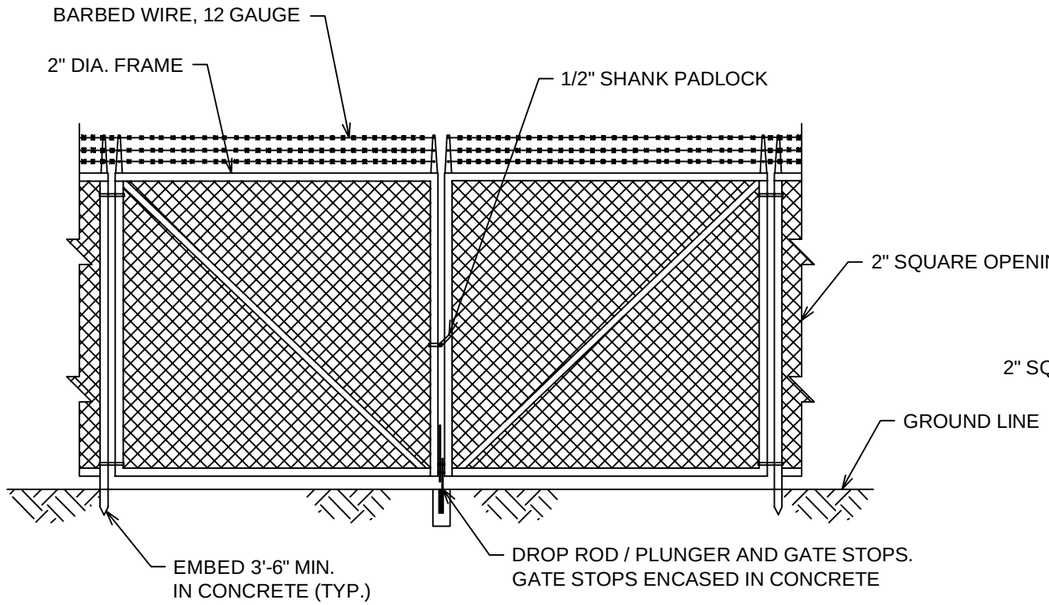

SWING GATE

NTS

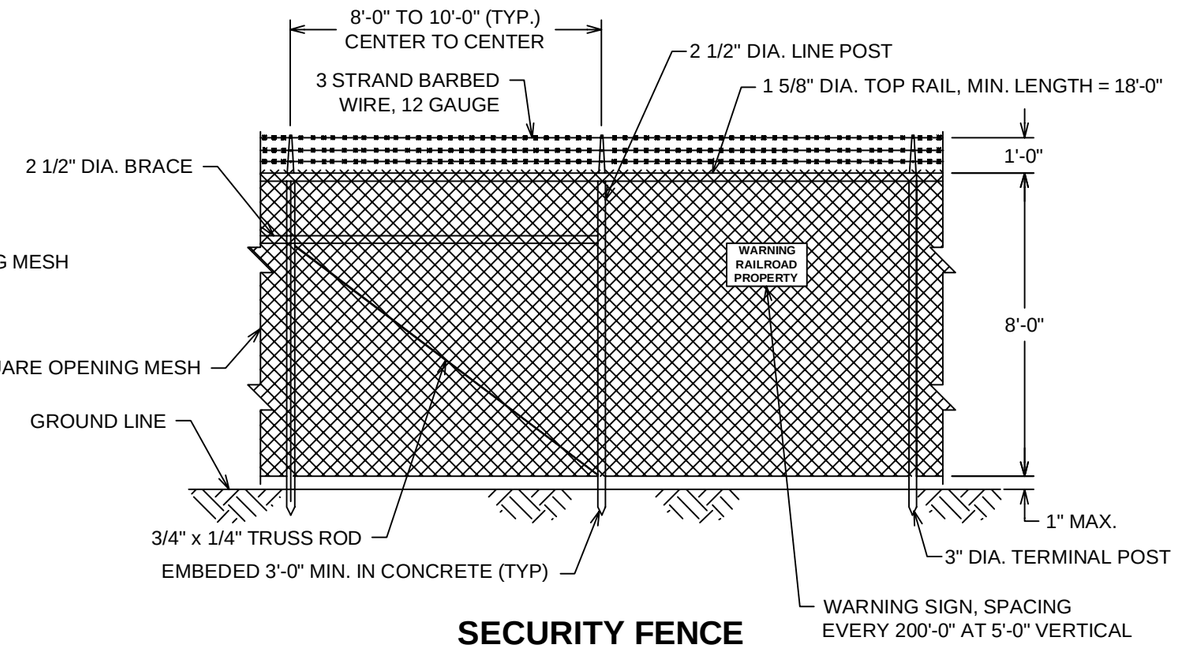

SECURITY FENCE

NTS

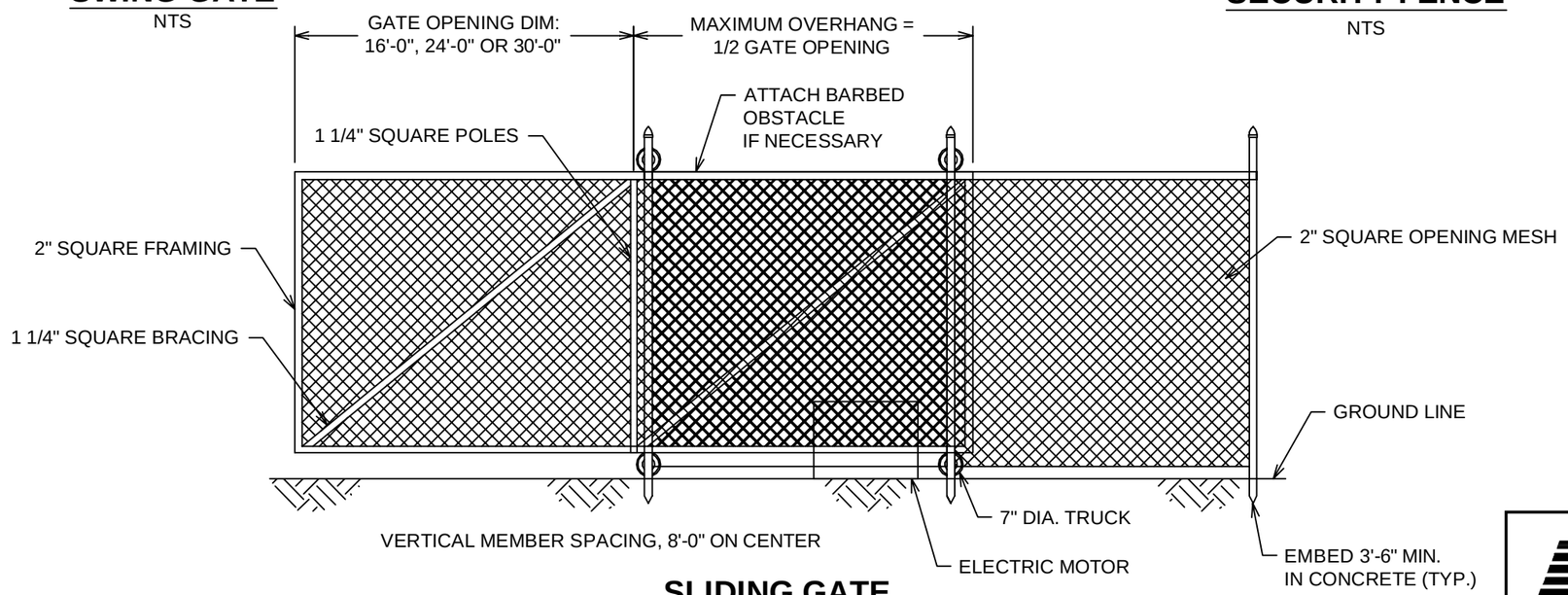

SLIDING GATE

NTS

NOTES:

1. REFER TO NORFOLK SOUTHERN - STANDARD SPECIFICATIONS FOR DESIGN AND CONSTRUCTION, DIVISION V-BARRIERS, SECTION SF (FEB 2013) FOR ADDITIONAL DETAILS.

REVISIONS		
DATE	LTR.	DESCRIPTION

NORFOLK SOUTHERN®

PUBLIC PROJECTS MANUAL
TYPICAL DRAWINGS

SECURITY FENCING DETAILS

REF. NO.: N/A

DATE: AUGUST 1, 2015 | DRAWING NO.: 22

Filename: P:\6248\400 - TECHNICAL\433 - PUBLIC PROJECTS MANUAL\STANDARD DRAWINGS\22_SECURITY FENCING DETAILS.DWG

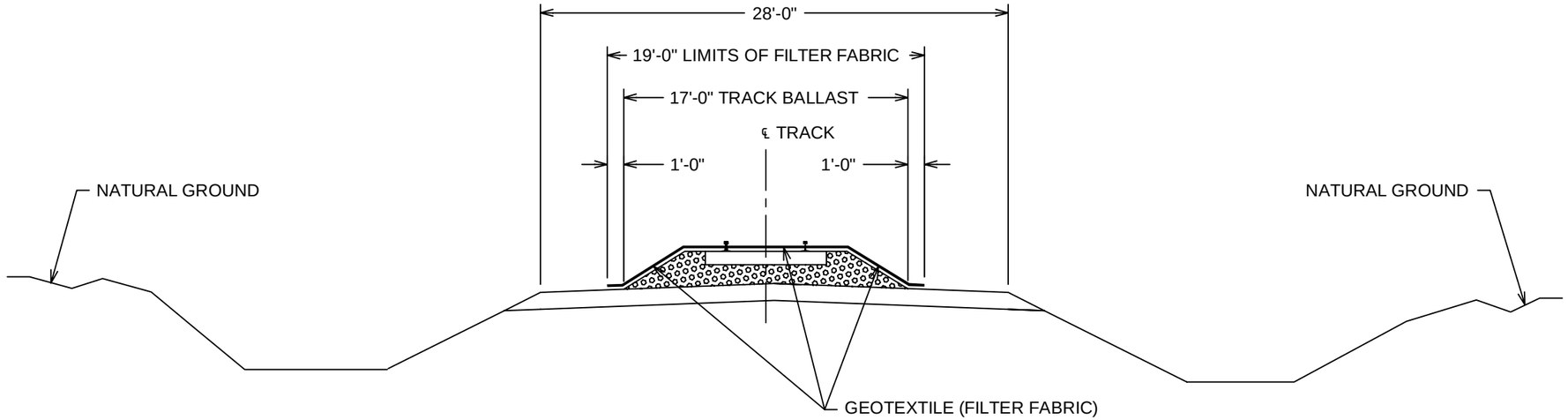

TYPICAL GEOTEXTILE ROADBED PROTECTION DETAIL

NTS

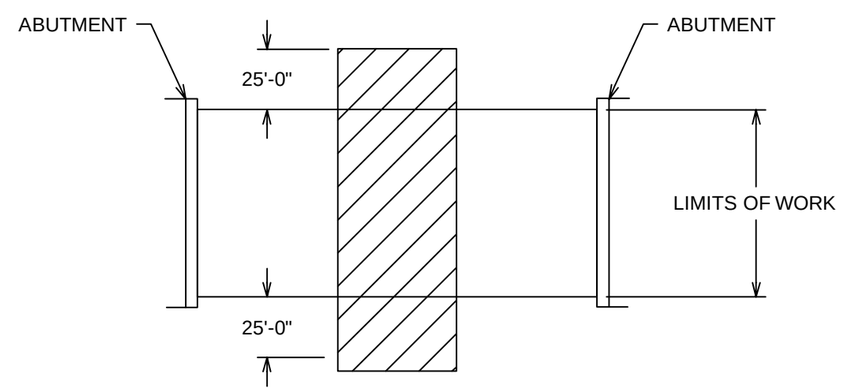

PLAN VIEW

OVERHEAD BRIDGE GEOTEXTILE PROTECTION
NTS

NOTES:

1. ADDITIONAL EROSION CONTROL MEASURES FOR PROTECTION OF RAILROAD DITCHES MAY BE REQUIRED.
2. NO SEPARATE PAYMENT WILL BE MADE FOR RAILROAD EROSION CONTROL MEASURES.
3. LIMITS OF SILT FENCE AND FILTER FABRIC PARALLEL TO RAILROAD SHALL EXTEND A MINIMUM OF 25'-0" OUTSIDE EDGE OF SUPERSTRUCTURE OR TOE OF SLOPE ON CONSTRUCTION. A GREATER LENGTH OF SILT FENCE OR FILTER FABRIC MAY BE REQUIRED.
4. FILTER FABRIC SHALL BE NAILED TO TIMBER TRACK TIES WITH "GRIP CAP" TYPE ROOFING NAIL AND PLASTIC DISC FASTENERS OR EQUIVALENT ON 24 INCH CENTER TO CENTER SPACING. FILTER FABRIC ON SHOULDER TO BE SECURED AS DIRECTED BY THE ONSITE REPRESENTATIVE.
5. INSTALLATION SHALL BE ADJUSTED ACCORDINGLY FOR MULTIPLE TRACKS.
6. GEOTEXTILE SHALL BE CLEANED AND MAINTAINED ON A DAILY BASIS .

REVISIONS		
DATE	LTR.	DESCRIPTION

NORFOLK SOUTHERN

PUBLIC PROJECTS MANUAL
TYPICAL DRAWINGS

GEOTEXTILE BALLAST
PROTECTION DETAIL

REF. NO.: N/A

DATE: AUGUST 1, 2015 | DRAWING NO.: 23

Filename: P:\6248\400 - TECHNICAL\433 - PUBLIC PROJECTS MANUAL\STANDARD DRAWINGS\23_GEOTEXTILE BALLAST PROTECTION DETAILS.DWG

J. List of Norfolk Southern Reference Documents

- NSCE-8 - http://www.nspipeandwire.com/NSRC/NSCE-8%20REV.pdf
- Detailed System Map of Norfolk Southern's Operating Divisions (Attached to this section)
- Sample AAR DOT Inventory Sign (Attached to this section)

OPERATING DIVISIONS

APRIL 2012

The Thoroughbred of Transportation

NORFOLK SOUTHERN

Norfolk Southern's Corporate Vision

Be the safest, most customer-focused and successful transportation company in the world

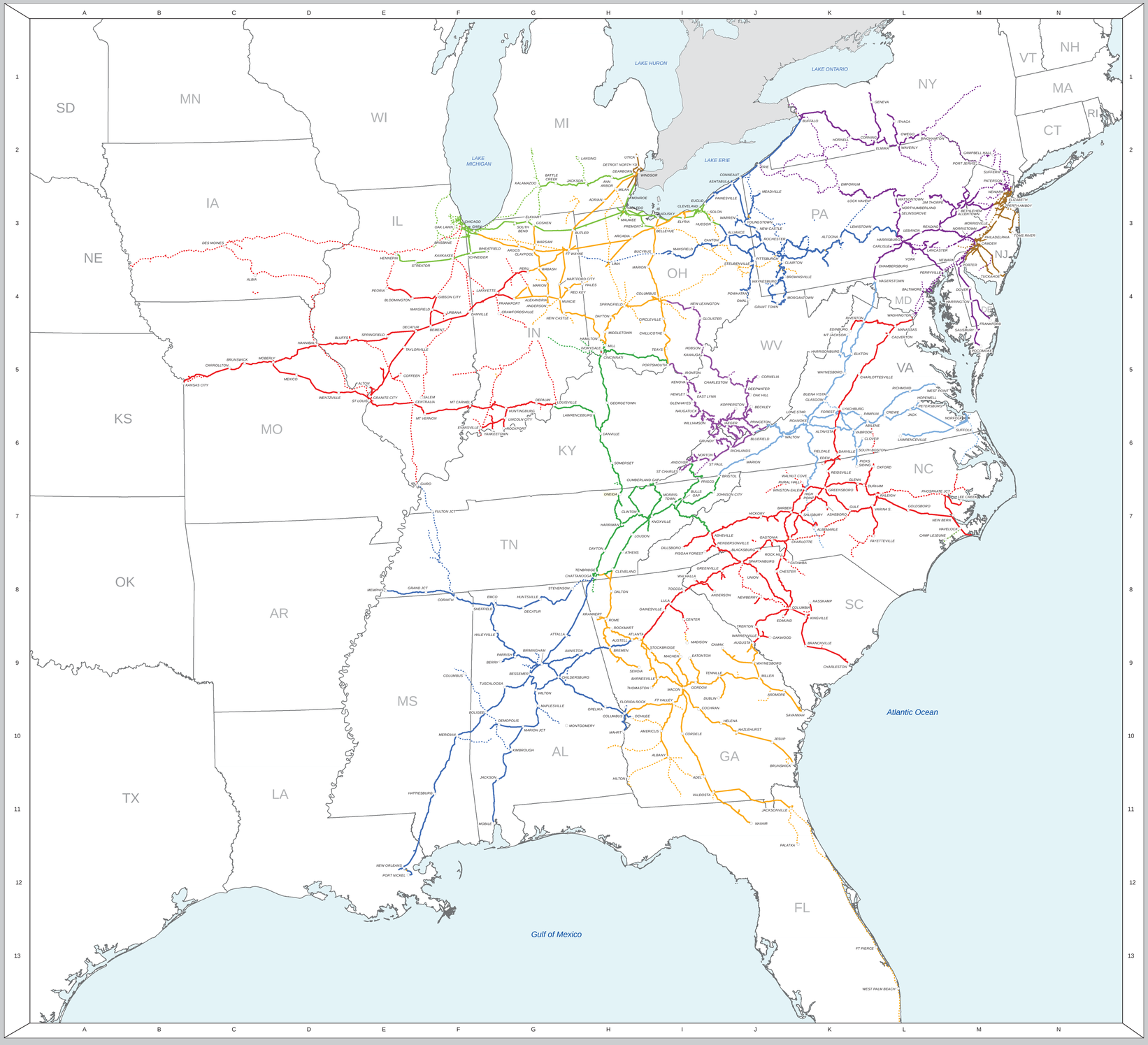

MAP LEGEND

NORTHERN REGION

- HARRISBURG
- PITTSBURGH
- DEARBORN

EASTERN REGION

- GEORGIA
- PIEDMONT
- POCAHONTAS
- VIRGINIA

WESTERN REGION

- ALABAMA
- CENTRAL
- ILLINOIS
- LAKE

○ Stations

SHARED ASSETS

NS TRACKAGE OR LEASED LINES (COLOR CODED BY DIVISION)

0 15 30 60 90 120 150 Miles

SITE LOCATION INDEX

ABILENE, VA. L5
ADEL, GA. I10
ADRIAN, MI. H2
ALBANY, GA. I10
ALBERMARLE, NC. K7
ALBIA, IA. C3
ALEXANDRIA, IN. G4
ALLENTOWN, PA. M3
ALLIANCE, OH. J3
ALTAVISTA, VA. K6
ALTON, IL. E5
AMERICUS, GA I10
ALTOONA, PA. K3
ANDERSON, IN. G4
ANDERSON, SC. J8
ANDOVER, VA. I6
ANN ARBOR, MI. H2
ANNISTON, AL. H9
ARCADIA, OH. H3
ARDMORE, GA. J9
ARGOS, IN. G3
ASHEBORO, NC. K7
ASHEVILLE, NC. J7
ASHTABULA, OH. J2
ATHENS, TN. H7
ATLANTA, GA. I8
ATTALLA, AL. H8
AUGUSTA, GA. J8
AUSTELL, GA. H8

BALTIMORE, MD. L4
BARBER, NC. K7
BARNESVILLE, GA. I9
BATTLE CREEK, MI. G2
BECKLEY, WV. J5
BELLEVUE, OH. I3
BEMENT, IL. F4
BERRY, AL. G9
BESSEMER, AL. G9
BETHLEHEM, PA. M3
BINGHAMTON, NY. L2
BIRMINGHAM, AL. G9
BLACKSBURG, SC. J7
BLOOMINGTON, IL. E4
BLUEFIELD, WV. J6
BLUFFS, IL. E4
BOLIGEE, AL. F9
BRANCHVILLE, SC. K9
BREMEN, GA. H9
BRISBANE, IL. F3
BRISTOL, VA. J6
BROWNSVILLE, PA. J3
BRUNSWICK, GA. K10
BRUNSWICK, MO. C5
BUCYRUS, OH. I3
BUENA VISTA, VA. K5
BUFFALO, NY. K1
BULLS GAP, TN. I7
BUTLER, IN. H3

CAIRO, IL. F6
CALVERTON, VA. L4
CAMAK, GA. J9
CAMDEN, NJ. M3
CAMP LEJEUNE, NC. M7
CAMPBELL HALL, NY. M2
CANTON, OH. J3
CARLISLE, PA. L3
CARROLLTON, MO. C5
CATAWBA, SC. K7
CENTER, GA. I8
CENTRALIA, IL. E5
CHAMBERSBURG, PA. L3
CHARLESTON, SC. K9
CHARLESTON, WV. J5
CHARLOTTE, NC. K7
CHARLOTTESVILLE, VA. K5
CHATTANOOGA, TN. H8
CHESTER, SC. J8
CHICAGO, IL. F3
CHILDERSBURG, AL. G9
CHILLICOTHE, OH. I4
CINCINNATI, OH. H5
CIRCLEVILLE, OH. I4
CLARFON, PA. J3
CLAYPOOL, IN. G3
CLEVELAND, OH. I3
CLEVELAND, TN. H7
CLINTON, TN. I7
CLOVER, VA. L6
COCHRAN, GA. I9
COFFEEN, IL. E5
COLUMBIA, SC. K8
COLUMBUS, GA. H9
COLUMBUS, OH. I4
COLUMBUS, MS. F9
CONNEAUT, OH. J2
CORDELE, GA. I10
CORINTH, MS. F8
CORNELIA, WV. J5
CORNING, NY. L2
CRAWFORDSVILLE, IN. G4
CREWE, VA. L5
CUMBERLAND GAP, TN. I6

DALTON, GA. H8
DANVILLE, IL. F4
DANVILLE, KY. H6
DANVILLE, VA. K6
DAYTON, OH. H4
DAYTON, TN. H7
DEARBORN, MI. H2
DECATUR, AL. G8
DECATUR, IL. E4
DEEPWATER, WV. J5
DEMOPOLIS, AL. G10
DEPAUW, IN. G5
DES MOINES, IA. C3
DETROIT NORTH YD, MI. H2
DILLSBORO, NC. I7
DOVER, DE. M4
DUBLIN, GA. J9
DURHAM, NC. L6

EAST LYNN, WV. I5
EATONTON, GA. I9
EDEN, NC. K6
EDINBURG, VA. K4
EDMUND, SC. J8
ELIZABETH, NJ. M2
ELKHART, IN. G3
ELKTON, VA. K5
ELMIRA, NY. L2
ELYRIA, OH. I3
EMCO, AL. G8
EMPORIUM, PA. K2
ERIE, PA. J2
EUCLID, OH. I2
EVANSVILLE, IN. F6

FAYETTEVILLE, NC. L7
FIELDALE, VA. K6
FLORIDA ROCK, GA. H9
FOREST, VA. K5
FRANKFORD, DE. M4
FRANKFORT, IN. G4
FREMONT, OH. I3
FRISCO, TN. I6
FT PIERCE, FL. L13
FT VALLEY, GA. I9
FT WAYNE, IN. H3
FULTON JCT, KY. F7

GAINESVILLE, GA. I8
GARY, IN. F3
GASTONIA, NC. J7
GENEVA, NY. L1
GEORGETOWN, KY. H5
GIBSON CITY, IL. F4
GLASGOW, VA. K5
GLENHAYES, WV. I5
GLENN, NC. K6
GLOUSTER, OH. I4
GOLDSBORO, NC. L7
GORDON, GA. I9
GOSHEN, IN. G3
GRAND JCT, TN. F8
GRANITE CITY, IL. E5
GRANT TOWN, WV. J4
GREENSBORO, NC. K6
GREENVILLE, SC. J8
GRUNDY, VA. J6
GULF, NC. K7

HAGERSTOWN, MD. L4
HALES, IN. H4
HALEYVILLE, AL. G8
HAMILTON, OH. H4
HANNIBAL, MO. D5
HARRIMAN, TN. H7
HARRINGTON, DE. M4
HARRISBURG, PA. L3
HARRISONBURG, VA. K5
HARTFORD CITY, IN. G4
HASSKAMP, SC. K8
HATTIESBURG, MS. F11
HAVELOCK, NC. M7
HAZLEHURST, GA. J10
HELENA, GA. J10
HENDERSONVILLE, NC. J7
HENNEPIN, IL. E3
HEWLET, WV. I5
HICKORY, NC. J7
HIGH POINT, NC. K7
HILTON, GA. H10
HOBSON, OH. I4
HOPEWELL, VA. L5
HORNELL, NY. K2
HUDSON, OH. I3
HUNTINGBURG, IN. G5
HUNTSVILLE, AL. G8

IAGER, WV. J6
IRONTON, OH. I5
ITHACA, NY. L1
IVORYDALE, OH. H5

JACK, VA. L5
JACKSON, AL. J10
JACKSON, MI. H2
JACKSONVILLE, FL. K11
JESUP, GA. J10
JIM THORPE, PA. M2
JOHNSON CITY, TN. J6

KALAMAZOO, MI. G2
KANAUGA, OH. I5
KANKAKEE, IL. F3
KANSAS CITY, MO. B5
KENOVA, WV. I5
KIMBROUGH, AL. G10
KINGSVILLE, SC. K8
KNOXVILLE, TN. I7
KOPPERSTON, WV. J5
KRANNERT, GA. H8

LAFAYETTE, IN. G4
LANCASTER, PA. L3
LANSING, MI. H2
LAWRENCEBURG, KY. H5
LAWRENCEVILLE, VA. L6
LEBANNON, PA. L3
LEE CREEK, NC. M7
LEWISTOWN, PA. L3
LIMA, OH. H3
LINCOLN CITY, IN. G5
LOCK HAVEN, PA. L2
LONE STAR, VA. K5
LOUDON, TN. H7
LOUISVILLE, KY. G5
LULA, GA. I8
LYNCHBURG, VA. K5

MACHEN, GA. I9
MACON, GA. I9
MADISON, GA. I9
MANASSAS, VA. L4
MANSFIELD, OH. I3
MASNFIELD, IL. F4
MAPLEVILLE, AL. G9
MARION, JCT, AL. G10
MARION, IN. G4
MARION, OH. I3
MARION, VA. J6
MAUMEE, OH. H3
MEADVILLE, PA. J2
MEMPHIS, TN. E8
MERIDIAN, MS. F10
MEXICO, MO. D5
MIAIM, FL. L13
MIDDLETOWN, OH. H4
MILAN, MI. H2
MILL, OH. H4
MILLEN, GA. J9
MOBERLY, MO. D5
MOBILE, AL. G11
MONROE, MI. H2
MONTGOMERY, AL. H10
MORGANTOWN, WV. K4
MORRISTOWN, TN. I7
MORRISVILLE, PA. M3
MT CARMEL, IL. F5
MT JACKSON, VA. K4
MT VERNON, IL. F5
MUNCIE, IN. G4

NAUGATUCK, WV. I5
NAVAR, FL. J11
NEW BERN, NC. M7
NEW CASTLE, IN. G4
NEW CASTLE, PA. J3
NEW LEXINGTON, OH. I4
NEW ORLEANS, LA. E12
NEWARK, DE. M3
NEWARK, NJ. M2
NEWBERRY, SC. J8
NORFOLK, VA. M5
NORRISTOWN, PA. M3
NORTHUMBERLAND, PA. L3
NORTON, VA. I6

OAK HILL, WV. J5
OAK LAWN, IL. F3
OAKWOOD, SC. J8
OCHLEE, GA. H9
OMAL, OH. J4
ONEIDA, TN. H6
OPELIKA, AL. H9
OWEGO, NY. L2
OXFORD, NC. L6

PAINESVILLE, OH. J2
PALATKA, FL. K11
PAMPLIN, VA. L5
PARRISH, AL. G9
PATERSON, NJ. M2
PEORIA, IL. E4
PERRYVILLE, MD. M3
PERTH AMBOY, NJ. M2
PERU, IN. G3
PETERSBURG, VA. L5
PHILADELPHIA, PA. M3
PHOSPHATE JCT, NC. M6
PICKS SIDING, NC. K6
PISGAH FOREST, NC. I7
PITTSBURGH, PA. J3
POCOMOKE, MD. M4
PORT JERVIS, NY. M2
PORT NICKEL, LA. E12
PORTER, DE. M3
PORTSMOUTH, OH. I5
POWHATAN, OH. J4
PRINCETON, WV. J6

RALEIGH, NC. L6
READING, PA. M3
RED KEY, IN. H4
REIDSVILLE, NC. K6
RICHLANDS, VA. J6
RICHMOND, VA. L5
RIVERTON, VA. L4
ROANOKE, VA. K6
ROCHESTER, PA. J3
ROCK HILL, SC. J7
ROCKMART, GA. H8
ROCKPORT, IN. G6
ROME, GA. H8
RURAL HALL, NC. K6

SALEM, IL. F5
SALISBURY, MD. M4
SALISBURY, NC. K7
SANDUSKY, OH. I3
SAVANNAH, GA. K9
SCHNEIDER, IN. F3
SELINSGROVE, PA. L3
SENOIA, GA. I9
SHEFFIELD, AL. G8
SOMERSET, KY. H6
SOUTH BEND, IN. G3
SOUTH BOSTON, VA. K6
SPARTANBURG, SC. J7
SPRINGFIELD, IL. E4
SPRINGFIELD, OH. H4
ST CHARLES, VA. I6
ST LOUIS, MO. E5
ST PAUL, VA. I6
STEUBENVILLE, OH. J3
STEVENSON, AL. H8
STOCKBRIDGE, GA. I9
STREATOR, IL. E4
SUFFERN, NY. M2
SUFFOLK, VA. M6

TAYLORVILLE, IL. E4
TEAYS, OH. I4
TENBRIDGE, TN. H8
TENNILLE, GA. J9
TOCCOA, GA. I8
TOLEDO, OH. H3
TOMS RIVER, NJ. M3
TRENTON, SC. J8
TUCKAHOE, NJ. M3
TUSCALOOSA, AL. G9

UNION, SC. J8
URBANA, IL. F4
UTICA, MI. H2

VABROOK, VA. K6
VALDOSTA, GA. J11
VARINA S., NC. L7

WABASH, IN. G3
WALHALLA, SC. I8
WALNUT COVE, NC. K6
WALTON, VA. J5
WARREN, OH. J3
WARRENVILLE, SC. J8
WARSAW, IN. G3
WASHINGTON DC. L4
WATSONTOWN, PA. L2
WAVERLY, NY. L2
WAYNESBORO, GA. J9
WAYNESBORO, VA. K5
WAYNESBURG, PA. J4
WENTZVILLE, MO. D5
WEST PALM BEACH, FL. L13
WEST POINT, VA. M5
WHEATFIELD, IN. F3
WILLIAMSON, WV. I5
WILTON, AL. G9
WINDSOR, ON. H2
WINSTON-SALEM, NC. K6

YANKEETOWN, IN. G6
YORK, PA. L3
YOUNGSTOWN, OH. J3

Prepared By: Office of M.S. Dewberry
Chief Engineer- Design and Construction

Engineering Design & Construction Geographic Information Systems

Brent R. Baur
Printed: 03/15/12

NS NORFOLK SOUTHERN

TO REPORT

CROSSING SIGNAL MALFUNCTION

CALL 1-877-201-4265

REFER TO CROSSING

361687R

(ID#)

LOCATED AT

BRIDGE ST

(ROAD NAME)